ISSN: 2707-1146
e-ISSN: 2709-4189

Nature & Science

International Scientific Journal



THE REPUBLIC OF AZERBAIJAN

Nature & Science

International Scientific Journal

Volume: 7 Issue: 2

Baku - 2025

The journal is included in the register of Press editions of the Ministry of Justice of the Republic of Azerbaijanon on 04.07.2019.
Registration No. 4243

International Indices

ISSN: 2707-1146
e-ISSN: 2709-4189
DOI: 10.36719

Editorial address
AZ1073, Baku,
Matbuat Avenue, 529,
"Azerbaijan" Publishing House,
6th floor

Phone: +994 99 805 67 68
+994 99 808 67 68
+994 12 510 63 99

e-mail
nature.science2000@aem.az

© It is necessary to use references while using the journal materials.
© https://aem.az
© info@aem.az

Founder and Editor-in-Chief

Researcher Mubariz HUSEYINOV, Azerbaijan Science Center / Azerbaijan
+994 50 209 59 68
https://orcid.org/0000-0002-5274-0356
tedqiqat1868@gmail.com

Editor

Assoc. Prof. Dr. Akif AGHBABALI, Baku State University / Azerbaijan
https://orcid.org/0000-0001-5793-9252
oruclu@rambler.ru

Assistant editors

Assoc. Prof. Dr. Fuad RZAYEV, Institute of Zoology of the MSERA / Azerbaijan
https://orcid.org/0000-0002-8128-1101
fuad.rzayev01f@gmail.com

Ph. D. Saliga GAZI, Institute of Zoology of the MSERA / Azerbaijan
https://orcid.org/0000-0002-9378-4283
seliqegazi08@gmail.com

Ph. D. Student Konul MAMMADOVA, Baku State University / Azerbaijan
https://orcid.org/0009-0005-6969-6338
konul.memmedova-bdu@mail.ru

Gulnar ALIYEVA, Azerbaijan Science Center / Azerbaijan
https://orcid.org/0009-0004-1769-777X
gulnar.musayeva1982@gmail.com

Language editor

Assoc. Prof. Dr. Gunay RAFIBAYLI, Baku State University / Azerbaijan

Editors in scientific fields

Prof. Dr. Ibrahim MAMMADOV, Baku State University / Azerbaijan
Assoc. Prof. Abulfaz TAGHIYEV, Baku State University / Azerbaijan

EDITORIAL BOARD

Prof. Dr. Irada HUSEYNOVA, Institute of Molecular Biology and Biotechnology of MSERA / Azerbaijan
Prof. Dr. Aziz SANJAR, University of North Karolina at Chapel Hill / USA
Prof. Dr. Vagif ABBASOV, Institute of Petrochemical Processes named after Academician Y. H. Mammadaliyev of MSERA / Azerbaijan
Prof. Dr. Nazim MURADOV, University of Central Florida / USA
Prof. Dr. Vagif FARZALIYEV, Institute of Chemistry of Additives named after M. Guliyev of the MSERA / Azerbaijan
Prof. Dr. Georgi DUKA, Moldovan Academy of Sciences / Moldova
Prof. Dr. Ibrahim JAFAROV, Scientific Research Institute of Plant Protection and Technical Plants of the MARA / Azerbaijan
Prof. Dr. Elshad GURBANOV, Baku State University / Azerbaijan
Prof. Dr. Aliaddin ABBASOV, Nakhchivan State University / Azerbaijan
Prof. Dr. Ilham SHAHMURADOV, Institute of Genetic Resources of MSERA / Azerbaijan
Prof. Dr. Ulduz HASHIMOVA, Institute of Physiology of MSERA / Azerbaijan
Prof. Dr. Alovsat GULIYEV, Institute of Soil Science and Agro Chemistry of MSERA / Azerbaijan
Prof. Dr. Sayyara IBADULLAYEVA, Institute of Botany of MSERA / Azerbaijan
Prof. Dr. Dunya BABANLI, Azerbaijan State Oil and Industry University / Azerbaijan
Prof. Dr. Mehmet KARATASH, Nejmettin Erbakan University / Turkey
Prof. Dr. Shaig IBRAHIMOV, Institute of Zoology of MSERA / Azerbaijan
Prof. Dr. Afat MAMMADOVA, Baku State University / Azerbaijan
Prof. Dr. Akbar AGHAYEV, Sumgayit Statet University / Azerbaijan
Prof. Dr. Rajes KUMAR, Ministry of Textile / India
Prof. Ali AZGANI, University of Texas at Tayler / USA
Assoc. Prof. Dr. Rinat ISKAKOV, Atyrau Oil and Gas University / Kazakhstan
Assoc. Prof. Dr. Bushra BILAL, Muhammad Ali Jinnah University / Pakistan
Assoc. Prof. Dr. Alia RZAYEVA, Institute of Natural Resources of MSERA / Azerbaijan
Assoc. Prof. Dr. Elchin HUSEYN, Rotterdam Erasmus University Medical Center / Netherlands
Dr. Svetlana GORNOVSKAYA, Beloserkovsk National Agrarian University / Ukraine

ISSN: 2707-1146
e-ISSN: 2709-4189

https://doi.org/10.36719/2707-1146/53/4-8

Nigar Babayeva
Azerbaijan State Pedagogical University
PhD in Chemistry
https://orcid.org/0000-0001-8954-7210
babayevanigar1979@gmail.com
Sevinj Mustafayeva
Azerbaijan State Pedagogical University
Master student
https://orcid.org/0000-0001-8954-7210
mustafayevasevinc35@gmail.com

Advantages of Using Intellect Maps in Chemistry Lessons

Abstract

The aim of this study is to learn the effect of using intellect maps during the Chemistry lessons and by this method on the mastering of the topic, the productivity of the lesson.

The study is based on the example of teaching the topic Ammonia using the intellect map method, which is recommended for teaching Chemistry in secondary schools. It has been shown that during the teaching of the subject, the written text that explained the content of the lesson should be consistent with the sequence in the corresponding mind map specially constructed by each student, and the branching to start from the main idea (topic name) should be carried out clockwise, covering the details and subtleties of the subject. It has been determined that the application of inductive and deductive methods in the form of interaction in the teaching of Chemistry serves to more easily master the topics of the subject of Chemistry. The main forms of thought are to create logical and critical thinking in students which are inductive thinking (induction) and deductive thinking (deduction). Induction is to unite examples under one principle according to them, that is, carry these examples to a general principle (from the specific to the general); the other form of thinking is deductive thinking (deduction). It has been noted that inductive thinking involves moving from the parts of a single whole (from the specific) to the whole, and deductive thinking involves moving from a single whole (from the general) to the parts of the whole.

Keywords: *intellect map, complete, ammonia, thinking, experiment, inductive, deductive, logical, critical, creative, wit brains*

Introduction

During the research, the keywords are presented to the students form an ideafrom the topic, and the student pays attention to the words that are appropriate, similar and synonymous to those keywords, and records them. Note that keywords mean the terms, concepts and expressions that express the main content of the topic and the essence of its individual paragraphs and are most often used in the text. Conducting research with mind maps, mapping also develop soft skills in students, as students master the lesson by seeing, hearing, feeling, and discussing. The fact that the keywords on the considered intellect consist of chemistry terms, concepts and expressions serves to enrich the chemical language by strengthening the interaction between the chemical language and the corresponding mind map and to increase the productivity of learning with the help of the wit map method (Kan & Dermer, 1983). Working with intellect maps also accustoms students to the correct spelling and pronunciation of relevant words and expressions (Mammadova & Shadlinskaya, 2017).

During the study, students were provided with a textbook, test booklet, a skeleton of a mind map prepared with special keywords, colored pencils and paper as a source. The goal is to make the student think logically, critically and creatively using keywords and branches of the map (Babayev & Babayeva, 2023).

Creative Commons Attribution-NonCommercial 4.0 International License (CC BY-NC 4.0)

ISSN: 2707-1146
e-ISSN: 2709-4189

In order to improve the topic and transfer knowledge from short-term memory to long-term memory, each student solves the test using the intellect map he/she has prepared. At this time, he/she completes the test by adding and noting the map using the textbook.

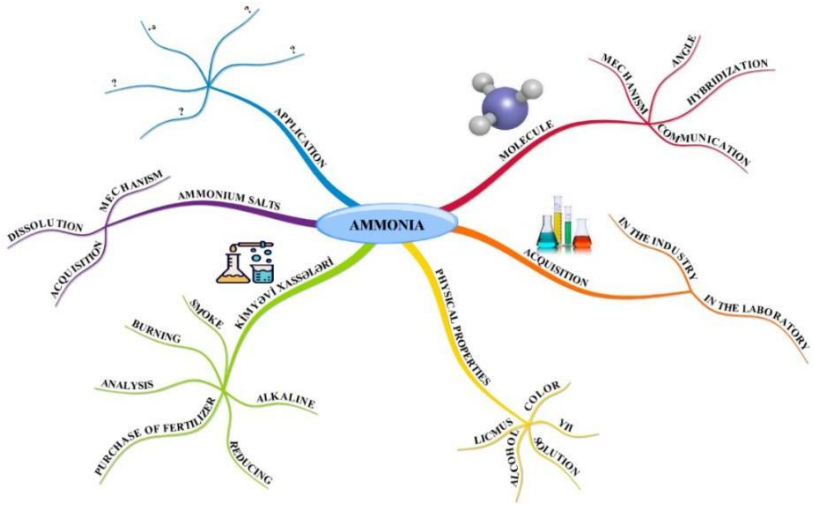

Main Part

Ammonia is a polar covalently bonded, angularly structured, polar molecule. In the NH_3 molecule, nitrogen has a valence of III and an oxidation state of -3. In the ammonia molecule, the nitrogen atom forms a $4sp^3$ hybrid orbital in the sp^3 hybridization state. 3 of them are covered by the –s electron clouds of the hydrogen atom, forming a $3sp^3$–s sigma bond, and one orbital remains free. The molecule has the shape of an irregular pyramid or tetrahedron, and the valence angle is 107.3º (Babayev & Babayeva, 2021).

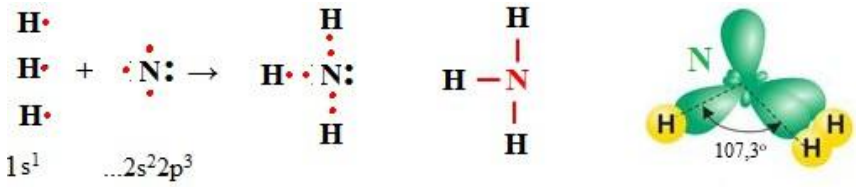

Industrial Production

Ammonia is obtained by the direct interaction of nitrogen and hydrogen.

$$N_2+3H_2 \overset{t,p,kat}{\longleftrightarrow} 2NH_3 + Q$$

Lab Production

It is obtained by heating ammonium salts with alkalis. At this time, the obtained ammonium hydroxide decomposes into water and ammonia.

$$NH_4Cl + NaOH \overset{t}{\rightarrow} NH_3\uparrow + H_2O + NaCl$$

Physical Properties

Ammonia is a colorless gas with a characteristic pungent odor, lighter than air, and very soluble in water. Under normal conditions, up to 700 liters of ammonia dissolve in one liter of water. When ammonia dissolves in water, part of it reacts with water and forms ammonium hydroxide. Therefore, a solution of ammonia in water is called ammonia water or liquid ammonia. At high pressure, ammonia liquefies and hydrogen bonds form between molecules in liquid ammonia.

Chemical Properties

1. Ammonia burns in pure oxygen, forming nitrogen, and when oxidized in the presence of a catalyst, it forms nitrogen monoxide and water.

ISSN: 2707-1146
e-ISSN: 2709-4189

$4NH_3 + 3O_2 \xrightarrow{t} 2N_2 + 6H_2O$ $4NH_3 + 5O_2 \xrightarrow{t,kat} 4NO + 6H_2O$

− Ammonia does not burn in air.
− Ammonia is a chemically active, basic molecule.
− Ammonia's aqueous solution turns litmus blue.

2. Since ammonia is a basic molecule, it enters into combination reactions with water and acids by the donor-acceptor mechanism. In this case, the oxidation state of nitrogen does not change, its valence increases by one unit (Babayev & Babayeva, 2021).

$NH_3 + HOH \leftrightarrow NH_4OH$ $NH_4OH \leftrightarrow NH_3 + HOH$

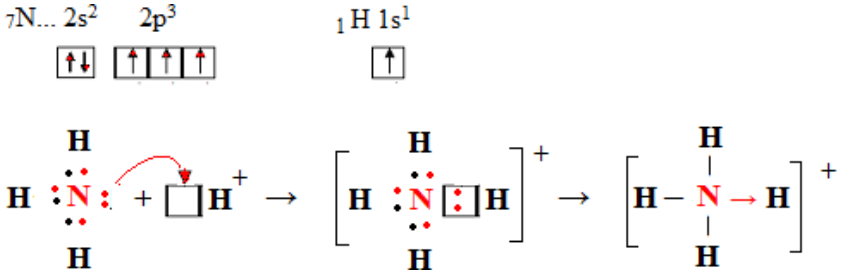

Ion	Graphic formula	Oxidation state	Valence
NH_4^+ (ammonium ion)	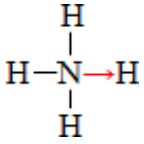	N (– 3) H (+ 1)	N – IV H – I

Ammonia enters into combination reactions with acids, forming **ammoniumsalts**. Depending on the basicity of the acid and the molar ratio of ammonia, it forms normal and acidic salts.

$NH_3 + HCl \rightarrow NH_4Cl$ $NH_3 + H_3PO_4 \rightarrow NH_4H_2PO_4$
ammonium chloride ammonium dihydroorthophosphate

$NH_3 + H_2SO_4 \rightarrow NH_4HSO_4$ $2NH_3 + H_3PO_4 \rightarrow (NH_4)_2HPO_4$
ammonium hydrosulfate ammonium hydroorthophosphate

$2NH_3 + H_2SO_4 \rightarrow (NH_4)_2SO_4$ $3NH_3 + H_3PO_4 \rightarrow (NH_4)_3PO_4$
ammonium sulfate ammonium orthophosphate

Ammonium salts are obtained from the reaction of ammonium hydroxide with acids.

$NH_4OH + H_2SO_4 \rightarrow NH_4HSO_4 + H_2O$

Ammonium salts are solid, well soluble in water, hydrolyzed compounds, and decomposed mainly into ammonia and the corresponding acid when heated.

$(NH_4)_2CO_3 \xrightarrow{t} 2NH_3 + CO_2 + H_2O$ $NH_4HCO_3 \xrightarrow{t} NH_3 + CO_2 + H_2O$

The nature of the decomposition of ammonium salts depends on the acid residue in the salt. Salts of acids such as HF, HCl, HBr, HJ, H2S, etc. decompose when heated, and turn back into salt when cooled. The formation of ammonium chloride is observed in the form of white smoke, this reaction is also called a **fireless smoke** reaction.

$$NH_4Cl \xrightarrow{heated} NH_3 + HCl \xrightarrow{cooled} NH_4Cl$$

Some ammonium salts do not decompose into ammonia and acid.

$$NH_4NO_3 \xrightarrow{t} N_2O + 2H_2O \quad NH_4NO_2 \xrightarrow{t} N_2 + 2H_2O$$

$$(NH_4)_2Cr_2O_7 \xrightarrow{t} N_2 + Cr_2O_3 + 4H_2O$$

The decomposition of ammonium salts of polybasic acids occurs in stages.

 ISSN: 2707-1146
e-ISSN: 2709-4189

$$(NH_4)_2SO_4 \xrightarrow{t} NH_3 + NH_4HSO_4 \quad NH_4HSO_4 \xrightarrow{t} NH_3 + H_2SO_4$$

The interaction of ammonium salts with alkalis is used in the **determination of ammonium ion (qualitative reaction)**. In this case, pungent-smelling ammonia gas turns wet litmus paper blue.

$$2NH_4Cl + Ca(OH)_2 \xrightarrow{t} 2NH_3\uparrow + 2H_2O + CaCl_2$$

Ammonium chloride is used in soldering metals.

$$2NH_4Cl + 4CuO \xrightarrow{t} CuCl_2 + 3Cu + N_2 + 4H_2O$$

3. Ammonia interacts with carbon dioxide to form urea.

$$CO_2 + 2NH_3 \xrightarrow{t} CO(NH_2)_2 + H_2O$$

4. Ammonia is a strong reducing agent. It reduces some metals from their oxides.

$2NH_3 + 3CuO \xrightarrow{t} 3Cu + N_2 + 3H_2O$ $8NH_3 + 3Fe_3O_4 \xrightarrow{t} 9\ Fe + 4N_2 + 12H_2O$

5. Ammonia decomposes when heated. $2NH_3 \xleftrightarrow{t} N_2 + 3H_2$

(Abbasov & Aliyev, 2020).

Research

Pedagogical experiments show that the brains map program, colored pencils and specially constructed mind maps, visual observation, comparison and discussion methods make students more enthusiastic about the topic. In the preparation of intellect maps, the sequence of ideas and connections, the selection and visualization of keywords are of great importance (Açkalmaz & Telkenar, 2015). Depending on the goal, intellect maps can be used in Chemistry lessons by individual students or by dividing tnem into small and large groups.

Conclusion

During the experiment, it was determined that as a result of the extensive use of terms, keywords, concepts and colored pencils during the lesson conducted using the wit map method, the productivity of learning the subject increases, the correct spelling and pronunciation of the used keywords and expressions becomes easier, and it creates conditions for the enrichment of students' Chemistry knowledge and skills.

The study shows that the material mastered by students using the wit map method remains in memory better and for a longer time than the material learned using other methods. Because the learning process with intellect maps is compatible with the learning styles of all students (visual, auditory, kinesthetic, digital) (Babayev & Babayeva, 2024).

References

1. Abbasov, M. M., Aliyev, V. S., Mustafayeva, R., M et al. *Chemistry. A manual for those preparing for exams under the new educational program (curriculum), high school students and teachers.* 2020. Supplement to the 2nd issue of the Abituriyent Magazine.
2. Abbasov, A. (2011). Main directions of curriculum reform.*Azerbaijan School Magazine*, 4, 21-32
3. Abbasov, M. M., Aliyev, A. H., Farajov, M. S., & Aliyev, V. S. (2014). Educational program (curriculum) in Chemistry for secondary schools (for Years VII-XI). *Chemistry at School*, 2-3.
4. Aghayeva, S. A., & Teymurov, Y. V. (2022). *Curriculum, methodology, pedagogy*. TAIM. Tehsil Publishing House-Polygraphy.
5. Achkalmaz, A., & Telkenar, G. (2015). *Compass of our brain. Mind maps with Tony Buzan teachings*. Beyaz Publications.
6. Babayev, Y., & Babayeva, N. (compiler). (2021). *Chemistry with mind maps. General chemistry*. Textbook. Book printing.
7. Babayev, Y., & Babayeva, N. (compiler). (2023). The use of didactic techniques in teaching Chemistry with the mind maps method.*ARTI Scientific Works*, 90, 2. https://journals.arti.edu.az/journal-page?id=195-yasin-babayev-nigar-babayeva
8. Babayev, Y., &Babayeva, N. (compiler). (2024, August 23-25). *"Regarding the relationship of Mind Map method and the chemical language"* 6th International Black Sea modern scientific

ISSN: 2707-1146
e-ISSN: 2709-4189

research congress (pp. 498-502). file:///C:/Users/User/Downloads/Telegram%20Desktop/6-FULL%20TEXTS%20BOOK.pdf

9. Danilova, A. G. (1999). How to organize and conduct a lesson – research. *Chemistry at School*, 7, 21-26.
10. Kan, R., & Dermer, O. (1983). *Introduction to chemical nomenclature*. Translated from English edited by Potapova V. M. Chemistry. http://www.vixri.ru/d2/Kan%20R._Vvedenie%20v%20ximicheskuju%20nomenklaturu.pdf
11. Mammadova, A. Z., Bandaliyeva, R. V., & Shadlinskaya, G. V. (2017). *The role and importance of the chemical language in the teaching process.Chemistry at School*, 4(60), 84-83. https://kimyamektebde.net/arxiv/4(60)2017/12_MemmedovaA.pdf
12. https://www.trims.edu.az/noduploads/book/quot-kimya-quot-fanni-uzra-8-ci-sinif-ucun-darslik1566190917-478.pdf

Received: 09.07.2024 Accepted: 19.01.2025

ISSN: 2707-1146
e-ISSN: 2709-4189

https://doi.org/10.36719/2707-1146/53/9-17

Fuad Rzayev
Azerbaijan Medical University
PhD in Biology
https://orcid.org/0000-0002-8128-1101
fuad.zi@mail.ru
Ali Nasirov
Institute of Zoology, of MSERA
https://orcid.org/0000-0001-6991-0334
nasirov.a50@bk.ru
Eldar Gasimov
Azerbaijan Medical University
https://orcid.org/0000-0002-5104-4260
eldar.gasimov@amu.edu.az

Comparative Analysis of the Distribution of Domestic Water Birds Helminths in Different Economic Regions in Azerbaijan

Abstract

In poultry farms established in our country, along with the breeding of productive domestic water birds, it is observed that helminthiasis affecting the quality of meat of the hosts is also spreading. There is a need to study the fauna of these pathogens and a number of ecological problems. In the present research work, the helminth fauna of domestic geese and ducks in various economic regions of Azerbaijan was determined and a comparative analysis was conducted. For this purpose, a total of 928 domestic water birds from 12 economic regions were examined by the method of complete helminthological dissection and identified using key books. As a result, it was found that a total of 27 species of helminths are currently parasitic in birds. Among the helminths belonging to four systematic groups, nematodes (13 species) predominate. Five species of them (*A. anseris, T. tenuis, H. dispar, C. anatis and B. obsignata*) are found in most economic regions (at least 9 economic regions). The *A. anseris* nematode is recorded throughout the study area. The highest number of helminth species is observed in the Lankaran-Astara (17), and the lowest number is observed in the Mil-Mughan (3) economic regions.

Keywords: *Anser anser dom., Anas platherhynchos dom., helminth fauna, distribution, economic regions, nematodes*

Introduction

Poultry products have their own place in satisfying people's needs for food, including meat. Helminths that cause serious harm to the host organism and reduce their productivity are still encountered in domestic water birds raised on local farms (Seyidbeyli, 2021). Therefore, one of the urgent issues is the determination of the helminth fauna of domestic waterfowl in the current period and the comparative analysis of their occurrence in different ecologically different areas. Studies on the helminth fauna of domestic geese and ducks in Azerbaijan began at the beginning of the 20th century and were later continued by other researchers (Shults, 1931; Shahtahtinskaya, 1952, 1959; Shirinov, 1961; Vahidova, 1978; Vahidova et al., 1982). As a result of the analysis of the literature data obtained, it became clear that the studies do not cover all economic regions of the country. In recent years, we have investigated the helminth fauna of domestic waterfowl in various regions of the country, the ultrastructural features of their practically important species, and a number of ecological problems (Rzayev, 2021a, 2021b, 2023a, 2023b, 2024; Rzayev et al., 2020, 2021a, 2021b, 2023; Seyidbeyli & Maharramov, 2018; Seyidbeyli & Rzayev, 2018; Seyidbeyli et al., 2020). The aim of the current research work was to conduct a comparative characterization of the distribution of domestic geese and ducks helminths in different economic regions of Azerbaijan.

Creative Commons Attribution-NonCommercial 4.0 International License (CC BY-NC 4.0)

ISSN: 2707-1146
e-ISSN: 2709-4189

Material and methods

The research work was carried out in the Institute of Zoology of Ministry of Science and Education, Parasitology Laboratory in 2012-2024. 928 domestic water birds (*Anser anser* dom. and *Anas platherhynchos* dom.) from 12 economic regions, were studied using the full helminthological dissection method (Dubinina, 1971). The processing of samples by economic regions is as follows: Baku and Absheron-Khizi (n=65), Daghlig Shirvan (n=32), Ganja-Dashkasan (n=154), Karabakh (n=33), Gazakh-Tovuz (n=59), Guba-Khachmaz (n=294), Lankaran-Astara (n=82), Central Aran (n=88), Mil-Mughan (n=27), Shaki-Zagatala (n=52), Shirvan-Salyan (n=42). Helminths collected from various organs of birds were fixed in 70% alcohol or 4% formaldehyde, and permanent preparations were prepared from a part of them. Helminths were examined under MBS-9 (Russia) magnifier, Amplival (Germany) and DM1000 (Leica, Germany) light microscopes, and pictures of worms were taken with a DFC425 (Leica, Germany) digital camera. Helminths were identified based on the Key book (Ryzhikov, 1967).

Results and discussion

As a result of the helminthological studies conducted by us to determine the helminth fauna of domestic birds, materials from 12 of the existing 14 economic regions were processed and the results are presented in table 1. It should be noted that since the areas of Baku and Absheron-Khizi economic regions are small, these areas were combined. Therefore, 11 divisions were made in Table 1. Material was not taken from the Eastern Zangazur economic region. In the Nakhchivan economic region, such studies have already been conducted by another researcher (Seyidbeyli, 2021). The distribution of helminth species detected was found to vary across the study regions. It was found that among the helminths included in systematic groups, the smallest distribution area was found in the acanthocephala - only 1 (Guba-Khachmaz economic region), while the trematodes were found in 4 (Guba-Khachmaz economic region; Lankaran-Astara economic region; Central Aran economic region; Shirvan-Salyan economic region), cestodes were found in 7 (Baku and Absheron-Khizi economic regions; Karabakh economic region; Guba-Khachmaz economic region; Lankaran-Astara economic region; Central Aran economic region; Mil-Mughan economic region; Shirvan-Salyan economic region), and nematodes were found in all the studied economic regions. Therefore, nematodes are the most widespread group among helminths in domestic waterfowl in the territory of country. In addition, out of the 13 nematode species recorded by us in domestic waterfowl, 5 species (*A. anseris, T. tenuis, H. dispar, C. anatis* and *B. obsignata*) are found in most economic regions (at least 9 economic regions) of Azerbaijan.

Table 1

Distribution of domestic water birds helminths by economic regions

№	Helminth species	1	2	3	4	5	6	7	8	9	10	11
	Cestodes											
1	*Cloacotaenia megalops*	-	-	-	-	-	+	-	-	-	-	-
2	*Diorchisinflata*	-	-	-	-	-	+	-	-	-	-	+
3	*Drepanidotaenia lanceolata*	-	-	-	-	-	+	+	+	+	-	-
4	*Drepanidotaenia przewalskii*	-	-	-	+	-	-	-	-	-	-	-
5	*Fimbriariafasciolaris*	-	-	-	-	-	+	+	+	-	-	+
6	*Microsomacanthus paramicrosoma*	-	-	-	-	-	+	-	-	-	-	-
7	*Tschertkovilepi ssetigera*	+	-	-	-	-	-	+	-	-	-	+

 ISSN: 2707-1146
e-ISSN: 2709-4189

8	*Ligula intestinalis*	-	-	-	-	-	-	+	-	-	-	-
	Trematodes											
9	*Echinoparyphium recurvatum*	-	-	-	-	-	-	-	+	-	-	-
10	*Echinostoma revolutum*	-	-	-	-	-	-	+	+	-	-	-
11	*Hypoderaeum conoideum*	-	-	-	-	-	+	+	+	-	-	-
12	*Paryphostomum novum*	-	-	-	-	-	-	+	-	-	-	-
13	*Notocotylus attenuatus*	-	-	-	-	-	+	+	-	-	-	+
	Nematodes											
14	*Amidostomum acutum*	-	-	-	-	-	-	+	+	-	-	-
15	*Amidostomumanseris*	+	+	+	+	+	+	+	+	+	+	+
16	*Trichostrongylus tenuis*	-	+	+	+	+	+	+	+	+	+	+
17	*Heterakis altaica*	-	+	-	-	-	-	-	-	-	-	-
18	*Heterakis dispar*	+	+	+	+	+	+	+	+	-	+	+
19	*Heterakis gallinarum*	-	-	+	-	-	+	-	+	-	-	-
20	*Ascaridiagalli*	-	-	+	-	-	-	-	-	-	-	-
21	*Porrocaecum crassum*	-	-	-	-	-	-	+	-	-	-	-
22	*Tetrameresfissispina*	+	-	-	-	-	+	+	+	-	+	+
23	*Hystrichis tricolor*	-	-	-	-	+	-	-	-	-	-	-
24	*Capillariaanatis*	+	+	+	+	+	+	+	+	-	+	+
25	*Eucoleus contortus*	-	+	-	-	-	-	+	+	-	-	-
26	*Baruscapillaria obsignata*	+	+	+	+	+	+	+	+	-	+	-
	Acanthocephala											
27	*Polymorphus magnus*	-	-	-	-	-	+	-	-	-	-	-

Note: 1. Baku and Absheron-Khizi; 2. Daghlig Shirvan; 3. Ganja-Dashkasan; 4. Karabakh; 5. Gazakh-Tovuz; 6. Guba-Khachmaz; 7. Lankaran-Astara; 8. Central Aran; 9. Mil-Mughan; 10. Shaki-Zagatala; 11. Shirvan-Salyan economic regions

One species of nematod (*A. anseris*) is found in all economic regions . This worm is considered a geohelminth and a specific parasite of waterfowl. It has been determined that the species diversity of helminths found in domestic water birds varies across economic regions. The

ISSN: 2707-1146
e-ISSN: 2709-4189

fewest helminth species in birds were recorded in the Mil-Mughan economic region (3 species), 6 species in each of the Baku and Absheron-Khizi, Karabakh, Gazakh-Tovuz, and Shaki-Zagatala economic regions, 7 species in the Daghlig Shirvan and Ganja-Dashkasan economic regions, 9 species in the Shirvan-Salyan economic region, 14 species in the Central Aran economic region, 15 species in the Guba-Khachmaz economic region, and the most in the Lankaran-Astara economic region (17 species).

Helminths belonging to all systematic groups in domestic waterfowl were recorded only in the Guba-Khachmaz region. Cestodes, trematodes and nematodes were found in domestic waterfowl in the Shirvan-Salyan, Lankaran-Astara and Central Aran economic regions. Cestodes and nematodes were found in Baku and Absheron-Khizi, Karabakh, Mil-Mughan economic regions, and only nematodes were found in the Daghlig Shirvan, Ganja-Dashkasan, Gazakh-Tovuz, Shaki-Zagatala economic regions.

The largest number of cestodes species (5 species) is found in the Guba-Khachmaz economic region. Four species are found in Lankaran-Astara, 3 species in Shirvan-Salyan, 2 species in Central Aran, and 1 species of cestode was found in birds in Baku and Absheron-Khizi, Karabakh and Mil-Mughan economic regions. Two species of cestodes (*D. lanceolata* and *F. fasciolaris*) that parasitize domestic water birds, unlike other tapeworms, were found in a total of 5 different areas (Guba-Khachmaz, Lankaran-Astara, Central Aran, Mil-Mughan, Shirvan-Salyan economic regions). *T. setigera* helminth 3 (Shirvan-Salyan, Lankaran-Astara, Baku and Absheron-Khizi economic regions), *D. inflata* parasite 2 (Guba-Khachmaz and Shirvan-Salyan economic regions), *C. megalops, D. przewalskii, M. paramicrosoma*, *L. intestinalis* cestodes were recorded in 1 economic region each. In terms of number (4 species) of digenetic sucking worms, they prevailed in the Lankaran-Astara economic region. 3 species are found in Central Aran, 2 species in Guba-Khachmaz, and 1 species in the Shirvan-Salyan economic region. Of the trematodes recorded in domestic waterfowl, the helminths *H. conoideum* and *N. attenuatus* are more often distributed in the study areas than others and are encountered in the Guba-Khachmaz, Lankaran-Astara, Shirvan-Salyan and Central Aran economic regions. The trematode *E. revolutum* is distributed in 2 (Lankaran-Astara and Central Aran economic regions), while the helminth *P. novum* and *E. recurvatum* are distributed in one economic region each (Lankaran-Astara and Central Aran economic regions, respectively). Nematodes, unlike helminths belonging to other systematic groups, dominate both in terms of species and in terms of distribution in economic regions. Nine species of nematodes are found in each of the Lankaran-Astara and Central Aran economic regions, 7 species in each of the Daghlig Shirvan, Ganja-Dashkasan, Guba-Khachmaz economic regions, 6 species in each of the Gazakh-Tovuz and Shaki-Zagatala economic regions, 5 species in each of the Shirvan-Salyan, Karabakh, Baku and Absheron-Khizi economic regions, and 2 species in the Mil-Mughan economic region. Five species of nematodes are observed in almost all economic regions. The least common species of nematodes in the study areas are the helminthes *A. acutum, H. altaica, A. galli, P. crassum, H. tricolor*.

The prevalence of helminths in both domestic geese and domestic ducks was studied separately in economic regions of Azerbaijan. Table 2 shows the prevalence of domestic geese in 12 economic regions of the country. In total, 21 species of helminths belonging to 4 systematic groups (cestodes, trematodes, nematodes and acanthocephala) were detected in domestic geese during the study years (Table 2). Among these species, nematodes predominated (11 species). On the other hand, 4 species of the mentioned helminths (all nematodes - *A. anseris, T. tenuis, H. dispar, B. obsignata*) were found in most economic regions. Of these, 1 species of nematode - *A. anseris* was recorded in all economic regions where the study was conducted (Table 2). In most areas, all nematodes recorded in domestic geese do not have intermediate hosts in their development cycle, that is, they are geohelminths. The highest number of helminth species infection of the named hosts was identified in the economic regions of Lankaran-Astara (12 species), Guba-Khachmaz (10 species), and Central Aran (10 species).

ISSN: 2707-1146
e-ISSN: 2709-4189

Table 2

Distribution of domestic geese helminths by economic regions

№	Helminth species	1	2	3	4	5	6	7	8	9	10	11
	Cestodes											
1	*Diorchisinflata*	-	-	-	-	-	+	-	-	-	-	-
2	*Drepanidotaenia lanceolata*	-	-	-	-	-	+	+	+	+	-	-
3	*Drepanidotaeniaprzewalskii*	-	-	-	+	-	-	-	-	-	-	-
4	*Fimbriaria fasciolaris*	-	-	-	-	-	+	+	+	-	-	+
5	*Tschertkovilepis setigera*	+	-	-	-	-	-	-	-	-	-	+
6	*Ligula intestinalis*	-	-	-	-	-	-	+	-	-	-	-
	Trematodes											
7	*Echinostoma revolutum*	-	-	-	-	-	-	+	-	-	-	-
8	*Paryphostomum novum*	-	-	-	-	-	-	+	-	-	-	-
9	*Notocotylus attenuatus*	-	-	-	-	-	+	-	-	-	-	-
	Nematodes											
10	*Amidostomum acutum*	-	-	-	-	-	-	+	-	-	-	-
11	*Amidostomum anseris*	+	+	+	+	+	+	+	+	+	+	+
12	*Trichostrongylus tenuis*	-	+	+	+	+	+	+	+	+	+	-
13	*Heterakis altaica*	-	+	-	-	-	-	-	-	-	-	-
14	*Heterakis dispar*	+	+	+	+	+	+	+	+		+	+
15	*Heterakis gallinarum*	-	-	+	-	-	+	-	-	-	-	-
16	*Ascaridia galli*	-	-	+	-	-	-	-	-	-	-	-
17	*Tetrameres fissispina*	-	-	-	-	-	-	-	+	-	-	-
18	*Capillaria anatis*	+	+	+	+	+	-	-	-	-	-	+
19	*Eucoleus contortus*	-	-	-	-	-	-	+	+	-	-	-
20	*Baruscapillaria obsignata*	+	+	+	+	+	+	+	+	-	+	-
	Acanthocephala											
21	*Polymorphus magnus*	-	-	-	-	-	+	-	-	-	-	-

Note: 1. Baku and Absheron-Khizi; 2. Daghlig Shirvan; 3. Ganja-Dashkasan; 4. Karabakh; 5. Gazakh-Tovuz; 6. Guba-Khachmaz; 7. Lankaran-Astara; 8. Central Aran; 9. Mil-Mughan; 10. Shaki-Zagatala; 11. Shirvan-Salyan economic regions

ISSN: 2707-1146
e-ISSN: 2709-4189

Helminths belonging to all systematic groups (cestodes, trematodes, nematodes and acanthocephala) were found in domestic geese only in the Guba-Khachmaz economic region. Cestodes, trematodes and nematodes were found in geese only in the Lankaran-Astara economic region. Cestodes and nematodes were found in Baku and Absheron-Khizi, Karabakh, Central Aran, Mil-Mughan, Shirvan-Salyan economic regions, and only nematodes were found in Shaki-Zagatala, Gazakh-Tovuz, Daghlig Shirvan, Ganja-Dashkasan economic regions.

In terms of the number of species, it was determined that cestodes were found most often in the Guba-Khachmaz and Lankaran-Astara economic regions (3 species in each), and least often in the Mil-Mughan, Karabakh, Baku and Absheron-Khizi economic regions (1 species in each). Of the 6 species of cestodes mentioned in domestic geese, 2 are more widespread than the others. The cestode *D. lanceolata* was found in the Guba-Khachmaz, Lankaran-Astara, Central Aran, Mil-Mughan economic regions, and the tapeworm *F. fasciolaris* was found in the Shirvan-Salyan, Guba-Khachmaz, Lankaran-Astara, Central Aran economic regions. Digenetic worms in domestic geese are found only in the Guba-Khachmaz and Lankaran-Astara economic regions and consist of 3 species (*E. revolutum, P. novum and N. attenuatus*). In terms of the number of species of nematodes, they were identified in the Ganja-Dashkasan economic region (7 species), the Daghlig Shirvan, Lankaran-Astara, Central Aran economic regions (6 species in each), and the Karabakh, Gazakh-Tovuz, Guba-Khachmaz economic regions (5 species in each). The nematodes that are least often found in domestic geese include the species *A. acutum, H. altaica, A. galli, T. fissispina*.

In the 12 economic regions studied, helminths of domestic ducks were also identified, the number of which, as in geese, is 21 (cestodes 5, trematodes 4, nematodes 11, and acanthocephala 1) (Table 3). Nematodes (11 species) predominate among the listed species. Among the 12 areas studied, the most parasites were recorded in the Guba-Khachmaz (11 species) and Lankaran-Astara (10 species) economic regions. No parasites were detected in domestic ducks in the Daghlig Shirvan and Mil-Mughan economic regions. One species of nematode (*C. anatis*) was observed in ducks in the Karabakh economic region. Helminths belonging to all systematic groups (cestodes, trematodes, nematodes, and acanthocephala) are found only in the Guba-Khachmaz economic region. Cestodes in domestic ducks are recorded in only 3 economic regions (Shirvan-Salyan, Guba-Khachmaz, Lankaran-Astara). More cestodes (4 species) were found in the Guba-Khachmaz economic region than in other areas. Digenetic worms in domestic ducks are recorded only in the Guba-Khachmaz, Lankaran-Astara, Central Aran, and Shirvan-Salyan economic regions.

Table3

Distribution of domestic ducks helminths by economic regions

№	Helminth species	1	2	3	4	5	6	7	8	9	10	11
	Cestodes											
1	*Cloacotaenia megalops*	-	-	-	-	-	+	-	-	-	-	-
2	*Diorchisinflata*	-	-	-	-	-	+	-	-	-	-	+
3	*Fimbriariafasciolaris*	-	-	-	-	-	+	+	-	-	-	-
4	*Microsomacanthus paramicrosoma*	-	-	-	-	-	+	-	-	-	-	-
5	*Tschertkovilepis setigera*	-	-	-	-	-	-	+	-	-	-	-
	Trematodes											
6	*Echinoparyphium recurvatum*	-	-	-	-	-	-	-	+	-	-	-

 ISSN: 2707-1146
e-ISSN: 2709-4189

7	*Echinostoma revolutum*	-	-	-	-	-	-	-	+	-	-	-
8	*Hypoderaeum conoideum*	-	-	-	-	-	+	+	+	-	-	-
9	*Notocotylus attenuatus*	-	-	-	-	-	-	+	-	-	-	+
	Nematodes											
10	*Amidostomum acutum*	-	-	-	-	-	-	-	+	-	-	-
11	*Amidostomum anseris*	-	-	+	-	-	+	+	-	-	-	+
12	*Trichostrongylus tenuis*	-	-	+	-	-	+	+	+	-	+	+
13	*Heterakis dispar*	-	-	+	-	-	+	+	-	-	+	-
14	*Heterakis gallinarum*	-	-	+	-	-	-	-	-	-	-	-
15	*Porrocaecum crassum*	-	-	-	-	-	-	+	-	-	-	-
16	*Tetrameres fissispina*	+	-	-	-	-	+	+	-	-	+	+
17	*Hystrichis tricolor*	-	-	-	-	+	-	-	-	-	-	-
18	*Capillaria anatis*	+	-	+	+	+	+	+	+	-	+	-
19	*Eucoleus contortus*	-	-	-	-	-	-	-	+	-	-	-
20	*Baruscapillaria obsignata*	-	-	+	-	-	-	-	-	-	-	-
	Acanthocephala											
21	*Polymorphus magnus*	-	-	-	-	-	+	-	-	-	-	-

Note: 1. Baku and Absheron-Khizi; 2. Daghlig Shirvan; 3. Ganja-Dashkasan; 4. Karabakh; 5. Gazakh-Tovuz; 6. Guba-Khachmaz; 7. Lankaran-Astara; 8. Central Aran; 9. Mil-Mughan; 10. Shaki-Zagatala; 11. Shirvan-Salyan economic regions

The most common species of digenetic worms (3 species) were found in the Central Aran economic region. The most widespread species among trematodes in domestic ducks in the study regions is the helminth *H. conoideum*. This parasite is recorded in domestic ducks in the Guba-Khachmaz, Lankaran-Astara and Central Aran economic regions. The trematode *N. attenuatus* is also found in 2 economic regions (Lankaran-Astara, Shirvan-Salyan). In domestic ducks, as in domestic geese, nematodes predominate in terms of species. Their distribution by region is as follows: 6 species in each of the Ganja-Dashkasan and Lankaran-Astara economic regions, 5 species in the Guba-Khachmaz economic region, 4 species in each of the Central Aran and Shaki-Zagatala economic regions, 3 species in the Shirvan-Salyan economic region, 2 species in each of the Baku and Absheron-Khizi, Gazakh-Tovuz economic regions, and 1 species of nematode in the Karabakh economic region. The nematode *C. anatis* is the most common species recorded in domestic ducks. The nematodes *B. obsignata, E. contortus, H. tricolor, P. crassum,* and *A. acutum* are each recorded in only one of the economic regions surveyed.

Conclusion

A total of 27 species of helminths were detected in domestic water birds in various economic regions of Azerbaijan. Of the helminths, acanthocephala is recorded in only 1 region, trematoda in 4 regions, cestodes in 7 regions, and nematodes in all economic regions. Out of 13 species of nematodes recorded in domestic waterfowl, 5 species (*A. anseris, T. tenuis, H. dispar, C. anatis*

ISSN: 2707-1146
e-ISSN: 2709-4189

and *B. obsignata*) were found in most economic regions (at least 9 economic regions). The nematode A. anseris, being a specific parasite of domestic waterfowl, was found in all study areas. The least number of helminth species in domestic geese and ducks was recorded in the Mil-Mughan economic region (3 species), and the most in Lankaran-Astara economic region (17 species).

References

1. Dubinina, M. (1971). Parasitological study of birds of the Academy of Sciences. *Methods of parasitological research*. Leningrad: Nauka, 140.
2. Ryzhikov, K. (1967). *Key to helminths of domestic waterfowl*. Moscow: Nauka, 262.
3. Rzayev, F. (2021a). Cestodes (Plathelminthes: Cestoda) of domestic waterfowl. *Advances in Biology & Earth Sciences*, 6(2), 133-141.
4. Rzayev,F. (2021b). A systematic review of flukes (Plathelminthes: Trematoda) of domestic goose (*Anseranser* dom.). *Biosystems Diversity*, 29(3), 294–302. doi:10.15421/012137
5. Rzayev, F. (2023a). *Helminths of domestic waterfowl of Azerbaijan and influence on them of plants with anthelmintic properties*. Baku: "Zangazurda", 256.
6. Rzayev, F. (2023b). Ultrastructural Features of the Digestive System of the Helminth *Heterakis dispar* Schrank, 1790 (Nematoda: Heterakidae).*Egyptian Journal of Veterinary Sciences.* 54(3), 503-514.
7. Rzayev, F. (2024).Ultrastructural Characteristics of the Reproductive Organs in Adult Female Helminth HeterakisdisparSchrank, 1790 (Nematoda: Heterakidae). *Egyptian Journal of Veterinary Sciences*. 55(1), 135-146.
8. Rzayev, F., Gasimov, E., Nasirov, A., & Seyidbeyli, M. (2023). Ultrastructural characteristics of the reproductive organs of adult male helminth Heterakis dispar (Nematoda: Heterakidae). *Biosystems Diversity*, 31(2), 202–208. doi:10.15421/012321
9. Rzayev, F., Nasirov, A., & Gasimov, E. (2021a). A systematic review of the parasites (Plathelminthes: Cestoda) of the domestic goose (*Anseranser* dom.). *The Journal of V. N. Karazin Kharkiv National University, Series "Biology*", 36, 58–73. DOI: 10.26565/2075-5457-2021-36-7
10. Rzayev, F., Nasirov, A., & Gasimov, E. (2021b). A systematic review of tapeworms (Plathelminthes, Cestoda) of domestic ducks (*Anas platyrhynchos* dom.). *Regulatory Mechanisms in Biosystems*, 12(2),353–361. doi:10.15421/022148
11. Rzayev, F., Seyidbeyli, M., Maharramov, S., & Gasimov, E. (2020). Forms and ultrastructural features of the lateral alae of the helminth *Trichostrongylus tenuis* Mehlis, 1846 (Nematoda: Trichostrongylidae). *The Journal of V.N. Karazin Kharkiv National University, Series "Biology"*, 34, 112-119. DOI: 10.26565/2075-5457-2020-34-12
12. Seyidbeyli, M. (2021). *Ecomorphological features of helminths widespread among domestic waterfowls in the Nakhchivan AR and the anthelminthic effect of plant preparations on them.* PhD Dissertation. Baku, 197.
13. Seyidbeyli, M., & Maharramov, S. (2018). Helminth fauna of domestic water birds (goose - Anser anser dom. and duck - Anas platherynchos dom.) of the Nakhchivan Autonomous Republic.*The Journal of V.N. Karazin Kharkiv National University "Biology",*31, 107-113.
14. Seyidbeyli, M., & Rzayev, F. (2018). Helminth fauna of waterfowl poultry in the territory of Babek region of Nakhchivan AR. *Journal of Entomology and Zoology Studies*, 6(1), 1668-1671.
15. Seyidbeyli M., Rzayev, F. & Gasimov, E. (2020). Ultrastructural features of the body wallof the helminth *T. tenuis* (Mehlis, 1846)(Nematoda: Trichostrongylidae). *Parazitologiya*, 54 (5), 402–412. DOI: 10.31857/S123456780605003X
16. Shahtahtinskaya, Z. (1952). *Helminthofauna of hunting and game birds in AzSSR*. PhD Thesis, Baku, 36 p.
17. Shahtahtinskaya, Z. (1959). Helminths of domestic and hunting waterfowl in AzSSR. *Works on helminthology for the 80th anniversary of academician K.N. Scrjabin*. Moscow, 197–202.

ISSN: 2707-1146
e-ISSN: 2709-4189

18. Shirinov, N. (1961). *Helminth fauna and helminthiases of domestic waterfowl of the Azerbaijan SSR and testing of piperazine sulfate in ganguleterakidosis*: PhD Dissertation. Baku, 206.
19. Shults, R. (1931). *Union Helminthological Expedition to Azerbaijan SSR*, 337–338.
20. Vahidova, S. (1978). *Helminths of birds of Azerbaijan*. Baku: Elm, 237.
21. Vahidova, S., Shirinov, N., Samadov, N. (1982). *Atlas, the main helminthiases of poultry in Azerbaijan*. Baku: Elm, 75.

Received: 28.08.2024 Accepted: 04.02.2025

ISSN: 2707-1146
e-ISSN: 2709-4189

https://doi.org/10.36719/2707-1146/53/18-22

Matanat Sadikhova
Ganja State University
PhD in Engineering
https://orcid.org/0000-0001-8707-7040
UDK 631.51
sadixovametanet@mail.ru

Technical Supply of Agricultural Machines

Abstract

The use of outdated technologies in the production of agricultural products causes significant losses in high amounts every year. Low labor productivity as a result of the application of outdated technologies in crop and animal husbandry and the low productivity of agricultural machinery reduces the competitiveness of local agricultural producers, does not allow for the creation of the necessary level of labor comfort and profitability in agriculture.

In addition, most of the agricultural machinery available in the country exceeds the specified wear periods and requires increased maintenance costs. In this regard, in recent years, high-precision agriculture and animal husbandry technologies have been intensively developed using computer science, electronics, automatic remote control systems and precision technology.

The article discusses high-yield-intelligent equipment designed for the application of resource-saving, environmentally friendly agricultural technologies in crop production. At the same time, due to the recent development of the production of machines with increased power and the creation of new modifications with smaller power differences, a variety of tractors has been explored.

Keywords:*agricultural production, fuel consumption, gearbox, tires, tractors, technology, engine*

Introduction

One of the most important conditions for the growth of agricultural production is machine-technological support of agricultural production.

World and local experience shows that the application of new high-efficiency resource-saving, high-precision technologies to agricultural production is only possible with high is possible on the basis of productive machinery and equipment (Alakbarov & Ismayilov, 2001).

As a result of the application of advanced technologies based on modern techniques to agricultural production, developed countries have achieved high indicators. Modern agricultural technologies are a complex of technological operations to manage the production process, achieving high productivity while ensuring environmental safety and certain economic efficiency. In modern conditions, effective development of agriculture is impossible without the transition to innovative technologies based on highly productive machines and equipment, called "Smart Agriculture" (Trubilin, 2010). Despite the achieved high technical indicators, foreign producers constantly improve the level of agricultural machinery.

Research

John Deere, Case-1H, New Holland, Deutz-Fahr, Valtra-companies use their own engines in their factories. In addition, they also use engines from different manufacturers in their tractors to expand the power range. Recently, thanks to the development of the production of machines with increased power and the creation of new modifications with smaller power differences, the range of tractors has expanded significantly. John Deere produces more than 39 models, New Holland − 65, Massey Ferguson − 56, Valtra − 31, Claas − 32, Deutz-Fahr − 31 models. Considering the high demand for their products in Southeast Asian countries, many tractor manufacturing companies organize production there (in China, India). Tractors are becoming mo re compact and maneuverable, and thanks to their modern design, they are even more advanced (Ismayilov, 2017)

Creative Commons Attribution-NonCommercial 4.0 International License (CC BY-NC 4.0)

 ISSN: 2707-1146
e-ISSN: 2709-4189

Many manufacturers offer tractors with a Powerboost power boost system. Numerous changes in the design of the engine and components made it possible to reduce the toxicity of exhaust gases. Tractors with power of 75-130 kW since 2007 - III class; Since 2008, 37-75 kW - Tier-IIIb, since 2011, for tractors with higher power class, and since 2014, it has been subject to higher standards. At the same time, the discharge of harmful substances should be reduced by 8 times, nitrogen oxides by about 2 times. The required indicators are obtained by using microparticle filters or selective catalytic reduction SCR (Selective-Catalytic Reduction) technology in engines.

Tractors with rapeseed oil engines are offered (Fendt, Deutz-Fahr, etc.). Also, the application of electronics is increasing, with the help of which all important functions of modern tractors are monitored and controlled. The innovation in tractors is the use of a high-power electrical network and the corresponding electric transmission of the cooler, air conditioner, compressor, water pump and electric transmission for external consumers (Tarasenko, 2002). The number of tractors with automatic transmission and continuously variable transmission is increasing and new models are appearing. At the same time, low-speed transmissions also appeared (Agroplus TTV-430 tractor manufactured by Deutz-Fahr up to 74 kW, Vario 312 tractor manufactured by Fendt company 81 kW) (Trubilin & Brusensov, 2019). Some tractors have a transport speed of up to 60 km/h. Like cars, they are equipped with anti-lock ABS brakes and use cruise control. Tractors of the upper power class are massively equipped with automatic parallel drive and program mable turning systems in a rotary lane (Fendt, John Deere, Case-1N, New Holland, etc.).

For tractors manufactured since 2007, the EU-2002/44/EC-directive has tightened the requirements on the level of vibration in the workplace. As a result, semi-active cabin suspension was introduced, the rear elastic elements of which automatically adapt to vibration changes during movement. (Claas and Valtra). For this purpose, the Claas company uses signals from three accelerometer transmitters installed in the cabin: speed, braking and steering angle. The damping process is controlled by changing the viscosity of the accelerating fluid (Claas) using a magnetic field or by electrically adjusting the cross-section of the accelerating hole (Valtra). The driver can adjust the acceleration by presetting the shifter to Acker (arable field), Straee (street) (Claas-firm) or manual control (Valtra tractor) (Trubilin & Brusensov, 2019).

ZF-group of companies offers new gearboxes. Thus, with the help of the usual renewal of the McCormick-X7- model- series, it was possible to create a completely new tractor. It is equipped with a ZF Transaxle T-7200 gearbox. The shift mechanism with synchronization device (ASS) requires no effort from the driver: proportional valves (PVS) ensure smooth, jerk-free shifting under all loads. X7 series tractors are produced in 143-212 horsepower.

Automatic PTO Switching − a new concept developed by Deutz-Fahr for continuously variable transmission tractors to automatically switch between nominal and "eco" PTO speed in order to reduce fuel consumption. It is a fully automatic system capable of making changes through interaction. Almost all companies offer an automatic gearbox on the market, which has elements of automatic selection depending on the engine speed and external load, can be reversed in work-only or all-gears, and changes gear without interrupting the flow of power. Some of them are also pre-programmed according to the load on the power take-off shaft, the position of the installed system or simply the duty cycle performed by the operator (Ismayilov, 2017). Involves changing the transmission according to the switching scheme. Some gearbox models allow you to select an economical operating mode when the tractor is partially loaded. According to some data, selecting this mode saves fuel by 18-22 %. The number of continuously variable transmission models is increasing. The Fendt company installs two-flow volume hydromechanical stepless transmission in the 400, 700, 800 and 900. Vario series with power from 63 to 269 kW-a. Their feature is a combination of mechanical and hydraulic gears (Figure 1) (Trubilin & Brusensov, 2019).

The division of power into mechanical and hydraulic-branches takes place in the planetary mechanism, and its combination is in the "collector" shaft. The power flow from the engine is transmitted through the torsional vibration damper to the planetary gear carrier, whose satellites rotate the ring and sun teeth. An external crown gear-wheel transmits rotation to an adjustable axial-piston hydraulic pump (the washer of this pump is stationary and the piston body changes the angle

ISSN: 2707-1146
e-ISSN: 2709-4189

of rotation). The sun gear is connected to the rear wheels by two-stage teeth and a "collector" shaft. When the hydraulic motor is not working, the outer ring gear of the planetary mechanism is locked, then all the power flow from the motor is transmitted directly to the sun gear and the transmission is 100 % mechanical.

Figure 1
Stepless transmission

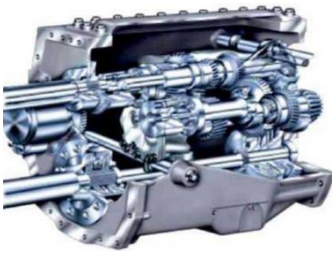

If the sun gear (and tractor wheels) is stopped, then the planetary gears (satellites) transmit power to the hydraulic pump via the crown gears. But at this moment, the pump is idle running, because the angle of rotation of the housing is zero, that is, no oil is supplied(Trubilin, 2008). The basis of the gearbox of the new New Holland tractors is the chain variator, which consists of a chain made of chromed steel. The chain moves between two discs of different diameters. Each chain-disc has a moving and a stationary conical surface. The gearbox allows you to change the speed continuously and without slipping in the range of 0.330 km/h. The sensors record the torque, as well as the frequency of rotation of the variator shaft and the engine, and transmit this information to the electronic control system of the gearbox.

When the angle of inclination of the hydraulic pump housing changes, oil is supplied to the hydraulic motors located at the two ends of the "collector" shaft. Locked hydraulic motors at the maximum angle of inclination of the bodies, transmit the power flow to the wheels through the shaft and the tractor starts to move (Trubilin & Brusensov, 2019).

The sun teeth, initially blocked by the stationary wheels, begin to rotate, and at the same time part of the power is mechanically transmitted to the wheels. As the pump continues to tilt to a maximum of 45°, the oil flow increases and the hydraulic motors rotate the "collector" shaft faster, increasing the speed of the tractor. At the same time, the sun teeth rotate faster and the mechanical transmission of energy flow increases accordingly.

Before the pump body reaches its position (45° at full capacity), the motor body starts to slowly change from 45° to 0°. When the body of the hydraulic motor is in the neutral position, all the motor power will be transmitted through the sun teeth, i.e. mechanically. This occurs because the crown teeth are blocked by the hydraulic pump, which cannot supply oil to the "neutral" hydraulic motors.

A stepless transmission with a mechanical two-speed gearbox, which can be changed only when the tractor is stopped, provides two ranges of driving speed: work 0-32 km/h and transport 0-50 km/h. Reverse movement is provided by changing the angle of inclination of the pump body in the opposite direction, which changes the direction of oil flow in the system.

The movement of the tractor is controlled by a joystick (multifunction control lever). It is moved forward to gain speed, and as the movement increases, the tractor accelerates, to move backward (moved backward). The degree of acceleration of the tractor (forward or reverse) can be changed using the switch located on the left side of the joystick, which has four positions. Turning the joystick to the left activates the reverse of the tractor, this time automatically, deceleration, stopping and acceleration in the other direction occur. The forward and reverse speed ratios can be programmed by the driver. This is time allows you to save, for example, it facilitates the execution of the movement during the turn. Moving the joystick to the right activates the cruise control unit,

 ISSN: 2707-1146
e-ISSN: 2709-4189

which maintains the set speed of the tractor. At this time, one of two operating modes is provided: maximum productivity or minimum fuel consumption (Runov, 2012).

On the right side of the tractor cab is the Variotronic automatic control system, which includes a joystick, a terminal and a control panel. This system is controlled by menu, buttons, key, engine support, transmission, power take-off shaft, differential locks and hydraulic valves.

The ZF Passau firm has launched the production of the newly developed Eccom 5.0 stepless transmission, which is designed for powerful tractors with a articulated frame (power up to 500 hp). The distinctive feature of this transmission is that it provides full power transmission in the economy modes, and the torque increases smoothly when the engine shaft rotation frequency is reduced.

The structure of the transmission was developed on the basis of technical documents that have proven themselves in the production of the ZF-Eccom model range. The power transmitted by the transmission is divided into two streams. Part of it is transmitted through an Eccom-type planetary gear, and the other part is transmitted through a reversible hydrostatic transmission (Pilnikova, 2012).

Design features include: an optimized gear range for reverse travel, a simple mechanism for connecting the front axle drive via a punched clutch, a custom-designed power shaft drive clutch with built-in brake, and a reinforced hydraulic pump drive for the drive and steering systems. Due to the dominance of transmission in tractors with a frame construction, power is transmitted from the engine to the axles through cardan shafts. The increased speed range of the transmission makes it possible to create a sufficiently large torque when starting work and ensures that the tractor moves at a speed of 50 km/h. When moving at a speed of 40 km/h, the engine shaft rotates at a reduced frequency. Electronic transmission the control system is installed directly in its housing.

Conclusion

In spite of the achieved high technical indicators, according to the level of agricultural equipment, producers are constantly improving in the following areas:

- creation of a wide range of high saturated energy equipment and production;
- adaptation (synchronization) of machine-tractor units;
- high precision execution of technological processes;
- lack of fuel consumption of engines;
- use of stepless transmissions;
- electronics, sensor systems, informatics, automation and wide application of robotics;
- application of electric transmission;
- implementation of environmental requirements – Euro − 4;
- ensuring the work is carried out at any time of the day.

References

1. Alakbarov, J. G., & Ismayilov, I. I. (2001). *Aqrar istehsalatın texniki təminatı* (Technical support of agrarian production). MMAN.
2. Ismayilov, I. I. (2017). *Kənd təsərrüfatı maşınları ilə işlərin yerinə yetirilməsi* (Performing work with agricultural machinery). Modul dərs vəsaiti "SEFT Consulting MMC" şirkəti tərəfindən hazırlanmışdır.
3. Ismayilov, I. I. (2017). *Kənd təsərrüfatı maşınlarından istifadə* (Use of agricultural machinery). Azərbaycan Respublikası Təhsil Nazirliyi tərəfindən 23 noyabr 2017-ci il tarixli, 415 saylı əmr ilə təsdiq edilmişdir.
4. *Lexion 770–620.Rukovodstvo po ekspluatatsii*. Claas.
5. Mammadov, N., Ibrahimov, T., & Akhundov, A. (2006). *Kənd təsərrüfatı maşınları* (Agricultural machinery). Azərbaycan Kənd Təsərrüfatı Akademiyasının mətbəəsi.
6. Pilnikova, N. V. (2012). *Povisheniye effektivnosti primeneniya resursosberegayushikh texnologiy tochnogo zemledeliya* (Improving the efficiency of resource-saving precision farming technologies): avtoreferat dis. kand. ekon. nauk.

ISSN: 2707-1146
e-ISSN: 2709-4189

7. Runov, B. A. (2012). *Osnovy texnologii tochnogo zemledeliya* (Fundamentals of precision farming technology). *Zarubejnyy i otechestvennyy opyt.* 2-e izdaniye. AFI.
8. Truflyak, E. V., & Trubilin, E. I. (2017). *Tocnoe zemledeliye* (Precision farming). Izdatelstvo "Lan".
9. Trubilin, E. I. (2010). *Kompyuternye texnologii v agroinjenernoy nauke i proizvodstve*(Computer technologies in agroengineering science and production).
10. Trubilin, E. I., & Brusensov A. S. (2019). *Innovatsionnyye tekhnologii v sel'skom khozyaystve* (Innovative technologies in agriculture). Kurs lektsiy. KubGAU.
11. Tarasenko, A. P. (2002). *Mekhanizatsiya i elektrofikasiya selskokhozyaystvennogo proizvodstva* (Mechanization and electrification of agricultural production). Kolos.
12. Trubilin, E. I. (2008). *Sel'skokhozyaystvennyye mashiny* (Agricultural machinery). Ucheb. posobiye. KubGAU.

Received: 12.07.2024 Accepted: 13.01.2025

ISSN: 2707-1146
e-ISSN: 2709-4189

https://doi.org/10.36719/2707-1146/53/23-29

Huseyn Mustafabeyli
Sheki Regional Scientific Center of ANAS
PhD in Geology-Mineralogy
https://orcid.org/0000-0003-4566-8787
huseyn.mustafabeyli@mail.ru
Murad Gahramanov
Sheki Regional Scientific Center of ANAS
https://orcid.org/0000-0001-5365-5279
m.xanov4@gmail.com

Biogeochemical Signs of the Desertification Process in the Territory of Gabala Region of Azerbaijan

Abstract

The process of desertification in the Gabala region of Azerbaijan is seen as a very urgent ecological and socioeconomic concern for the hydrometeorological climate that is gradually drying up,

The process of desertification manifests itself in different intensity depending on the natural conditions of the area, especially anthropogenic, relief, climate, biological, etc.

The gradual increase of in drought in the region from year to year, indifferent changes in the temperature and humidity regime of the air, soil pollution with waste, overgrazing of pastures, etc. continue to have a negative impact on the ecological balance of the area.

Physical erosion of landscapes and the acceleration of the desertification process are caused by changes in the direction of air circulation, together with abrupt temperature variations (8-10^{0}C), dips in relative humidity below 30 %, and changes in atmospheric pressure.

The desertification process is displayed by an increase in xerophytic vegetation.

It is expedient to use natural biogeocenoses as a biogeochemical research method to assess the progress of the desertification process (Mamedov et al., 2016; Mustafabeyli, 2023, pp. 457-469). The aim is to demonstrate the strong buffering capacity of soils because of the high levels of organic carbon, potassium, phosphorus, and humus in the soils, as well as the stability of the climate type in biogeocenoses and high indicators of biodiversity.

Keywords: *Gabala region, biogeocenosis, landscape monitoring, silt samples, desertification process*

Introduction

In the territory of Gabala region, Bumchay, Tikanlichay, Hamzalichay, Damiraparanchay and Vandamchay rivers form a dense river network, and they unite in the southern part of the region to form Turyanchay river.

A variety of soil types can be found in the Gabala area, extending from the Great Caucasus watershed into the Alazan-Haftaran valley and the northern slope of the Sheki plateau (Rustamov &Rustamova, 2016; Mustafabeyli et al., 2020).

Mountain meadow-grass, mountain meadow-like black soil, mountain meadow-forest, mountain forest-brown, mountain forest, alluvial-meadow, meadow-swamp, mountain black and mountain chestnut soil types are widespread. Mountain meadow soils cover a relatively large area in the northeastern part of the region. Mountain-meadow lands cover a large area between 2000-3000 m above sea level in the alpine and subalpine zones near the watershed. The area of mountain meadow-forest soils is somewhat less, and was formed on the erosion products of clay cists at the upper border of the forest and inter-forest clearings, under sparse beech forests and subalpine meadows between 1800-2100 m above sea level (Regional geographical problems of the Republic of Azerbaijan, 2003; Mustafabeyli, 2012).

Creative Commons Attribution-NonCommercial 4.0 International License (CC BY-NC 4.0)

ISSN: 2707-1146
e-ISSN: 2709-4189

Mountain brown-forest soils spread between Bumchay and Vandamchay basins, at altitudes from 1100 to 2200 m above sea level, and cover a wide area. These soils are characterized by thick and dark humus (8.0−15.0 %) forest substrate, high water retention capacity, and heavy clayey mechanical composition.

On the northern slopes of the plateau ridges located here, along with the usual hardened and carbonated, mountain-black soils, dark chestnut and chestnut soils are also common in small areas.

In all altitudinal zones, the composition of the original vegetation has changed and been destroyed, and has been replaced by derived plants.

Map-scheme – 1

Physical map of Gabala region. The areas where soil and silt samples were taken are shown on the map

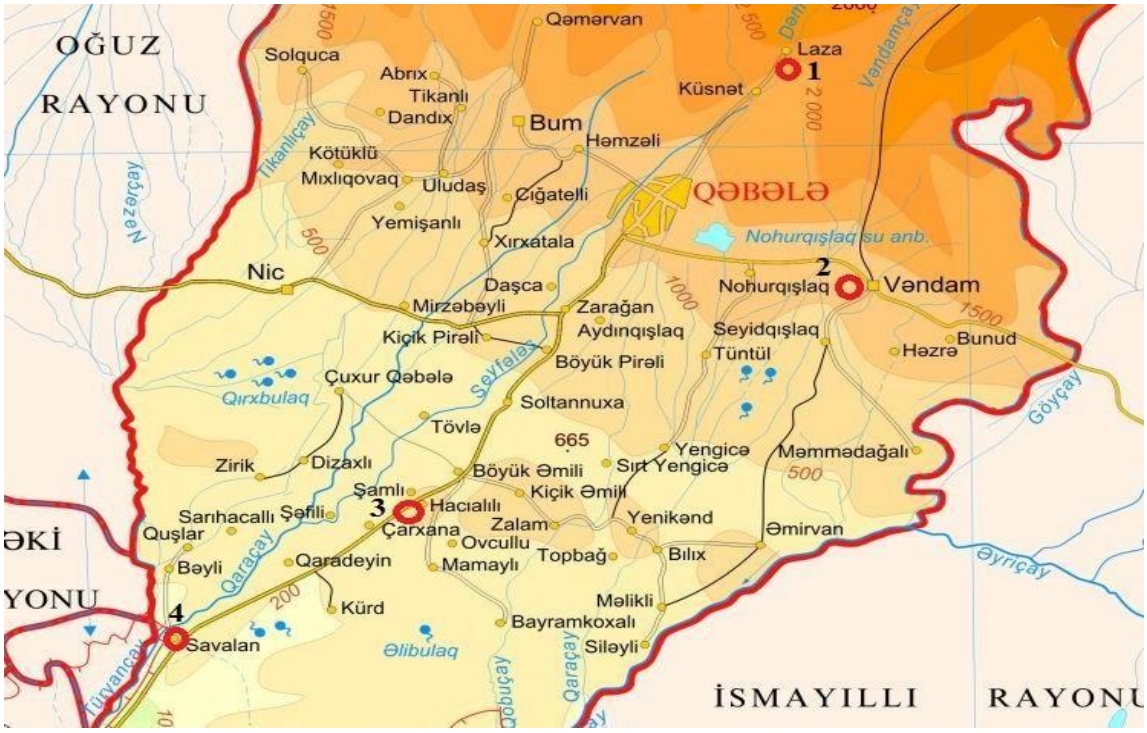

The climate is mainly temperate and humid. The amount of abundant sunny days in the area is 2200-2300 hours and the total solar radiation fluctuates between 120-135 kcal/cm^2.

Research

The mountainous terrain in Gabala region presents a number of geomorphological and geological problems. Here, it manifests itself with extensive severe erosion, washing, landslides, avalanche processes, flood events and high seismicity.The most extensive mineral resources of this region are building materials. Among them are clay (Karkhana, Savalan), which has large reserves in the rocks of the Upper Jurassic and Cretaceous periods, as well as clay shales and sandstones. There are large amounts of river stone, sand and gravel reserves in the catchment areas of the Bumchay, Hamzalichay, Damiraparanchay and Vandamchay rivers.They are used in the production of bricks, ceramic tiles, and drainage pipes, as well as in concrete production and road construction (Regional geographical problems of the Republic of Azerbaijan, 2002; Mustafabeyli et al., 2020).

During landscape diagnostic monitoring, soil samples were also taken from a number of different forest and meadow landscape types. All soil and silt samples were prepared in accordance with the general research methodology for determining the amount of biophilic macro and

 ISSN: 2707-1146
e-ISSN: 2709-4189

microelements (Mustafabeyli, 2023, pp. 474-491; Mustafabeyli & Gahramanov, 2022, pp. 301-307).

Table 1

Coordinates of silt and soil samples taken from the territory of Gabala region

№	Sampling stations	Examples	Coordinates
1.	Gabala region, Damiraparanchay. Turbaza. Absolute height 1200 m.	Sandy-silt	N – 41.00.58. E – 47.53.40.
2.	Gabala region, Vandamchay. Gabala - Baku highway. Absolute height 800 m.	Sandy-silt	N – 40.57.09. E – 47.55.57.
3.	Gabala region, Damiraparanchay. Charkhana.Absolute height 220 m.	Sandy-silt	N – 40.47.48. E – 47.37.54.
4.	Gabala region, Turyanchay. Damiraparanchay. Savalan. Absolute height 180 m.	Sandy-silt	N – 40.46.39. E – 47.36.20.

As a result of landscape diagnostic studies, it was determined that the desertification process in the Gabala region is mainly dependent on the semi-arid climate in the Amirvan Plateau and Turyanchay Valley in the southern part of the region.

In the areas located on the southern slope of the Greater Caucasus Range (between the settlements of Bum — Gabala — Vandam) in the Gabala region, the desertification process is manifested with greater intensity, depending on the anthropological factor.

The chemical composition of the silt and soil samples submitted for chemical analysis to the laboratory of the Sheki Regional Center of the Agrarian Services Agency is given in *Table 2*.

Table 2

Chemical composition of sludge and soil samples taken from the territory of Gabala district

№	Stations	Indicators	Unit of measure	Analysis result	Norm	Evaluation
1.	Damiraparanchay. Turbaza.	pH	—	9.06	6.6-7.5	Alkaline
		Salinity	—	0.169	0-2	Non-salt
		Humus	%	0.12	2-3	weak
		P_2O_5	kg/ha	49.22	60-120	Very weak
		K_2O	kg/ha	76.5	250-550	Very weak
		Na	mg/kg	30.9	81-120	Very weak
		N	%	0.006	0.09-0.17	Very weak
		Fe	mg/kg	10.9	2.5-4.5	High
		Lime	%	19.7	5-15	High
		Mn	mg/kg	7	14-50	Weak
		Cu	mg/kg	1.2	≥ 0.2	Adequate
		Zn	mg/kg	0.36	1.0-2.4	Weak
2.	Vandamchay. Gabala — Baku highway.	pH	—	8.76	6.6-7.5	Alkaline
		Salinity	—	0.203	0 -2	Non-Salt
		Humus	%	1.87	2-3	Very weak
		P_2O_5	kg/ha	8.575	60-120	Weak
		K_2O	kg/ha	105	250-550	Very weak
		Na	mg/kg	10.4	81-120	Very weak
		N	%	0.093	0.09-0.17	Medium

 ISSN: 2707-1146
e-ISSN: 2709-4189

		Fe	mg/kg	12.01	2.5-4.5	High
		Lime	%	10.04	5-15	Medium
		Mn	mg/kg	7.4	14-50	Weak
		Cu	mg/kg	1.7	≥ 0.2	Adequate
		Zn	mg/kg	0.74	1.0-2.4	Weak
3.	Damiraparanchay. Charkhana.	pH	—	8.54	6.6-7.5	Alkaline
		Salinity	—	0.592	0-2	Non-Salt
		Humus	%	1.02	2-3	Very weak
		P_2O_5	kg/ha	5.075	60-120	Very weak
		K_2O	kg/ha	87	250-550	Very weak
		Na	mg/kg	77.2	81-120	Weak
		N	%	0.051	0.09-0.17	Weak
		Fe	mg/kg	14.4	2.5-4.5	High
		Lime	%	6.32	5-15	Medium
		Mn	mg/kg	8.4	14-50	Weak
		Cu	mg/kg	3.3	≥ 0.2	Adequate
		Zn	mg/kg	0.55	1.0-2.4	Weak
4.	Turyanchay. Damiraparanchay. Savalan.	pH	—	8.67	6.6-7.5	Alkaline
		Salinity	—	0.984	0-2	Non-Salt
		Humus	%	0.87	2-3	Very weak
		P_2O_5	kg/ha	4.95	60-120	Very weak
		K_2O	kg/ha	103.75	250-550	Very weak
		Na	mg/kg	255.7	81-120	Very high
		N	%	0.043	0.09-0.17	Very weak
		Fe	mg/kg	13.1	2.5-4.5	High
		Lime	%	7.04	5-15	Medium
		Mn	mg/kg	10.6	14-50	Weak
		Cu	mg/kg	1.9	≥ 0.2	Adequate
		Zn	mg/kg	0.64	1.0-2.4	Weak

As it appears from *Table 2*, the following regularities were found in the silt samples taken along the middle reaches of Damiraparanchay and Vandamchay:

1. Silt substrates are typically characterized by alkaline environmental conditions with pH values ≥ 8.0. The amount of assimilated Fe element is also found in very high quantities.

2. The amount of humus, phosphorus, nitrogen, and assimilated Mn and Zn elements in the silt substrate is significantly lower than normal.

3. In most cases, the carbonation and Cu content of the silt substrate were represented at an average level.

4. While the amount of Na element is below the norm in the upper and middle reaches of the Damiraparanchay River, which corresponds to a semi-humid climate (Mustafabeyli, 2023, pp. 457-469), it is sharply above the norm in the Turyanchay area, which has semi-arid climatic conditions.

ISSN: 2707-1146
e-ISSN: 2709-4189

Scheme 2
Salinity and carbonation indicators in Damiraparanchay and Vandamchay river bed silts of Gabala region

Salt	Lime	Sample 1	Sample 2	Sample 3	Sample 4
20	1.0	L			S
18	0.9				
16	0.8				
14	0.7				
12	0.6			S	
10	0.5		L		
8	0.4				L
6	0.3		S	L	
4	0.2	S			
2	0.1				
0	0				

As can be seen from *Scheme-2*, the following regularities were identified in the silt samples as they descended along the Damiraparanchay and Vandamchay riverbeds:

1. The amount of salinity (mS/cm) is approaching the normal limits from low values, while the amount of lime (in % carbonate content), on the contrary, is significantly decreasing from the normal in this direction.

2. As the Damiraparanchay and Vandamchay rivers descend along the riverbed, the alkalinity-acidity indicators in the sludge samples are usually pH ≥ 8.0, which is due to the leaching of alkaline elements (Na, Ca, K, Mg, etc.) from floodplains in high mountainous areas.

3. The decrease in the ratio of carbonation to salinity indicates an intensification of the desertification process in the area (Mustafabeyli & Gahramanov, 2023, pp. 506-515; Mustafabeyli &Gahramanov, 2023, pp. 248-254).

4. Since the amount of K and P elements absorbed in silt samples is significantly lower than the norm, silting of agricultural fields as a result of floods and inundations creates serious difficulties for agricultural activities.

5. The closeness of the nitrogen element to the norm allows for the cultivation of nitrogen-loving plants for a while in soils silted up by floods and inundations.

6. As the Damiraparanchay and Vandamchay rivers descend along the riverbed, the amount of Fe absorbed in the silt samples is significantly higher than normal, the Cu element is sufficient, and the Mn and Zn elements are below normal.

7. Over time, this silt material turned into soil, causing an increase in humus and biophilic elements such as K, P, Mn, Cu, and Zn associated with humus, and a decrease in carbonation, salinity, and alkalinity.

8. When comparing the chemical composition of silt samples from the Damiraparanchay river beds of Gabala region and Dashagilchay river beds of Oguz region, it is revealed that the former have a more alkaline environment. This situation may be associated with greater erosion of flood hotspots in the Damiraparanchay basin.

Thus, desertification is a complex process that occurs as a result of the interaction of biological, physical, chemical and ecological characteristics of the territory (Mustafabeyli, 2023, pp. 255-265;

ISSN: 2707-1146
e-ISSN: 2709-4189

Mustafabeyli & Gahramanov, 2023, pp. 248-254). Physical, chemical, biogeochemical and ecological indicators are used for analysis of this process. These indicators help to determine how the territory has changed and the extent to which ecosystems have been disrupted as a result of both natural and anthropogenic influences.

Conclusion

In the territory of Gabala region, the desertification process is manifested with greater intensity in the southern part of Amirvan plateau and partly in the Turyanchay valley, depending on the climatic conditions, and on the southern slope of the Main Caucasus Range (in the area between the villages of Nij and Vandam) depending on the anthropological factor. Therefore, while the amount of Na element is below the norm in the upper and middle reaches of the Damiraparanchay, which corresponds to the semi-humid climate, it has sharply increased above the norm in the Turyanchay area, which has semi-arid climatic conditions.

The alkalinity-acidity indicators in the sludge samples are often pH ≥ 8.0 as the Damiraparanchay and Vandamchay rivers descend. This is associated with the leaching of alkaline elements (Na, Ca, K, Mg, etc.) from the high mountainous regions. That is why declining silt samples' carbonate to salinity ratio suggests that the desertification process in the southern plateau region is getting stronger.

References

1. Mamedov, C. I., Shukurlu, Y. H., Azizov, F. Sh., & Mustafabeyli, H. L. (editor). Aliyev, Q. M. (2016). *The natural Biocoenosis biodiversity and its protection in the village of Sheki, Bash Shabalyd.*
2. Mustafabeyli, H. L. (editor). (2012). *The natural geographical world of the Sheki-Zagatala region: problems – Sheki Regional Scientific Center. 40 years that became history*. "Apostrophe".
3. Mustafabeyli, H. L. (editor). Latifov, E. K., Rahimov, Y. R., Agabalayev, G. M., & Suleymanov, U. S. (2020). *Landscape-diagnostic and economic characteristics of the natural resources of the Sheki-Zagatala region of Azerbaijan*. Printing house of the Sheki Regional Scientific Center of ANAS.
4. Mustafabeyli, H. L. (2023). Application of biogeochemical indicators in landscape diagnostics. *Endless Light in Science*(Almaty, Kazakhstan),January, 474-491. https://doi.org/10.24412/2709-1201-2023-474-491
5. Mustafabeyli, H. L. (2023). Landscape diagnostic and biogeochemical characteristics of arid and humid type biogeocenoses.*Endless Light in Science* (Almaty, Kazakhstan), February, 457-469. https://doi.org/10.24412/2709-1201-2023-457-469
6. Mustafabeyli, H. L. (2023). On the biogeochemical properties of rocks, silt and plants common on the southern slope of the Greater Caucasus. *Endless Light in Science*(Almaty, Kazakhstan), March, 255-265. https://doi.org/10.24412/2709-1201-2023-255-265
7. Mustafabeyli, H. L., &Gahramanov, M. A. (2022).Biogeochemical characteristics of soil types of the Sheki-Zagatala region of Azerbaijan. *Endless Light in Science*(Almaty, Kazakhstan),December, 301-307. https://doi.org/10.24412/2709-1201-2022-301-307
8. Mustafabeyli, H. L., &Gahramanov, M. A. (2023).Characteristic features of biogeochemical processes in the landscape belts of the Sheki-Zagatala region of Azerbaijan. *Endless Light in Science*(Almaty, Kazakhstan), January, 506-515. https://doi.org/10.24412/2709-1201-2023-506-515
9. Mustafabeyli, H. L., &Gahramanov, M. A. (2023, March).Biogeochemical characteristics of soil types in the Sheki-Zakatala region of Azerbaijan.*Collection of materials of the International scientific and practical conference "Natural resource potential and ecological rehabilitation of degraded landscapes* (pp. 248-254). https://doi.org/10.36684/86-1-2023-248-254
10. *Regional geographical problems of the Republic of Azerbaijan*. (2002). Gabala region. "Ismail" Publishing House. Polygraphy Center.

ISSN: 2707-1146
e-ISSN: 2709-4189

11. *Regional geographical problems of the Republic of Azerbaijan*. (2003). Sheki-Zagatala economic region. “Nafta-Press” Publishing House.
12. Rustamov, G. I., &Rustamova, A. M. (2016). *Ecogeochemical characteristics of the landscapes of the southern slope of the Greater Caucasus*. Europe.

Received: 26.08.2024 Accepted: 29.12.2024

ISSN: 2707-1146
e-ISSN: 2709-4189

https://doi.org/10.36719/2707-1146/53/30-34

Gumru Balakhanova
Azerbaijan State Pedagogical University
PhD in Biology
https://orcid.org/0000-0002-1709-1442
19_bq_91@mail.ru

The Relationship Between the Physical-Chemical Properties of Soils and Fungi Biota in Different Areas of Baku City

Abstract

The aim of this research to investigate the physical-chemical properties of soils in different areas of Baku city, which are used for various purposes, and the diversity of fungal biota. Exploring on soil samples which collected from educational institutions, parks, hospitals, and residential buildings revealed that the physical-chemical indicators of soils, such as pH level, humus content, and moisture retention, have an impact on the distribution of fungal species. Higher humus content and pH levels in soils from educational institutions were observed to result in greater fungal biota diversity.

The spread of fungal species is strongly influenced by pH and humus content. Soil pH and organic matter composition play a significant role in the development of fungal colonies. The results indicated that a total of 53 fungal species were identified, with 88.7 % belonging to the Ascomycota division and 11.3 % to the Zygomycota division. Fungal species can be either universal or specific in nature.

This investigation provides important insights for understanding the role of soils in maintaining ecosystem functions and biological diversity in urban environments. The relationship between physical-chemical properties of soils and fungal biota plays a vital role in urban ecosystem management and can be a key factor in future efforts to preserve biological diversity in city environments.

Keywords: *soil ecological properties, microbiota, fungal biota, physical-chemical indicators, pH level, humus content, moisture retention*

Introduction

Urban environments create constantly changing and complex ecosystems due to the interaction of various physical, chemical, and biological processes. Urban soils are influenced not only by natural processes but also by urbanization, industrial activities, infrastructure development, agricultural practices, and other human activities. These influences cause significant changes in the soil structure, composition, and ecosystem functions. In urban areas, these changes lead to differences in physical and chemical properties of soils, as well as shifts in the biotic composition (Aliyev, 2023).

The chemical and physical properties of soil including pH level, moisture retention, humus content, and other indicators are the key factors that influence the development of microorganisms, plants, and fungal biota. Especially in areas with intense urbanization, changes in these indicators directly affect the biotic life of the soil (Aliyev, Mammadov, & Hasanov, 2023). Urbanization changes the functions of ecosystem functions, along with changes in soil properties, result in alterations in the fungal species that present in soils and their distribution.

Fungal biota plays a significant role in soil ecosystems by regulating functions such as soil fertility, nutrient cycling, and overall soil health. Fungi are also indispensable in maintaining soil structure, regulating water balance, and performing other vital ecosystem services. Therefore, the impact of physical-chemical properties of soils, particularly those influenced by urbanization, on fungal biota has an ecological importance (Aliyev & Huseynov, 2020).

Creative Commons Attribution-NonCommercial 4.0 International License (CC BY-NC 4.0)

ISSN: 2707-1146
e-ISSN: 2709-4189

Baku, as a rapidly developing city, is characterized by intense urbanization and a diverse range of soil types and biological components. For example, soil composition and biotic structure differ significantly across industrial zones, parks, educational institutions, residential buildings, and other urban objects. These differences, depending on the use of the land, influence the distribution and diversity of local fungal species (Aliyev & Mammadov, 2023). The diversity of fungal biota and the physical-chemical properties of soils in different areas of the city provide valuable information for assessing ecosystem health and developing appropriate ecological measures.

The aim of this study to examine the physical-chemical properties of soils in various areas of Baku and understand how these properties affect the local fungal biota. This research will provide valuable data for future studies on improving soil quality, enhancing ecosystem functions, and improving ecological conditions. Ultimately, understanding the impact of urbanization and anthropogenic influences on urban soils and fungal biota is an important step toward ensuring the sustainability of ecosystem services (Balakhanova, 2022).

Materials and Methods

Soil samples were investigated for the relationship between their physical-chemical properties and the spread of fungal species which collected from different areas of the sity. The main goal of the research was to understand how the characteristics of soils affect the development of fungal biota and to use this information to understanding the ecological status of the urban environment.

In learning the physical-chemical properties of the soils, samples were taken from educational institutions, parks, hospitals, and residential buildings. The samples from each area were sent to the laboratory under sterile conditions. The analysis of these samples determined the soil's pH level, humus content, moisture retention, mineral composition, and granulometric structure (Cavadov& Guliyev, 2023).

The pH value of the soils was measured by mixing a certain amount of soil with water. This indicator shows the acidity or alkalinity of the soil and is one of the key factors determining the development and spread of fungal biota (Huseynov &Ismailov, 2021). The humus content of the soil was determined using the drying method. Humus content indicates the organic matter composition of the soil, which is a primary food source for fungi.

Soil moisture retention was calculated by weighing the soil samples before and after they were moistened. This indicator helps to understand how the water retention capacity of the soil affects the development of fungal biota. The granulometric structure of the soils was determined by granulometric analysis. This method helps study the particle size of the soil and the interrelations of the particles (Khalilov & Hajiyev, 2021).

The mineral composition of the soils was determined using specific laboratory methods. Minerals are essential elements for the development of fungal species. These methods help assess the quantity of key minerals in the soil and their impact on fungal biota.

To study the fungal biota, soil samples were inoculated onto special agar media. These media support the growth of fungi and facilitate their spread. After incubation, fungal spore development was observed over a period of 7-10 days. The developed fungal colonies were analyzed microscopically, and different fungal species were identified. The morphological characteristics of fungal species, the color of colonies, and their growth rates were taken into account during the microscopic observations (Mammadov & Huseynov, 2020).

Statistical analyses were conducted to evaluate the relationship between the physical-chemical properties of the soils and the spread of fungal biota. In this process Pearson correlation analysis and ANOVA tests were used. Pearson correlation analysis was applied to measure the relationship between soil physical-chemical properties and the spread of fungal species. The ANOVA test helped identify statistical differences between the soil samples taken from different areas (Mammadov &Ismailov, 2022). Through these methods, the relationships between soil physical-chemical properties and the spread of fungal biota were determined, and these findings can be used for managing urban ecosystems.

Results and Discussion

ISSN: 2707-1146
e-ISSN: 2709-4189

The results obtained showed a direct relationship between the properties of the soils and the spread of fungal species. Among the physical-chemical properties of the soils, pH, humus content, moisture retention, and mineral composition played particularly important roles. The soils collected from educational institutions had a neutral pH level (7.0-7.2), which created favorable conditions for fungal biota development. In contrast, soils of parks had a lower pH level (6.0-6.5), indicating higher acidity. This difference had a direct impact on the spread of fungal species, as each fungal species thrives best at specific pH levels.

The results regarding humus content were also noteworthy. Soils from educational institutions had significantly higher humus content (1.13-3.12 times) compared to other areas. This suggests that the abundance of organic matter in the soil positively influences fungal biota. Soils with higher humus content supported a greater diversity of fungal species.

Moisture retention in the soils was another significant factor affecting fungal biota. Soils from residential buildings had relatively lower moisture content, which resulted in fewer fungal species developing in these areas. This indicates that the moisture retention capacity of the soil is an important factor for the growth of fungal colonies.

Analysis of fungal species diversity revealed a total of 53 fungal species present in the soils. The majority of these species belonged to the Ascomycota division (88.7 %), while the remaining species were from the Zygomycota division (11.3 %). Distribution were observed the differences in fungal species. Some species were found in all areas, while others were only present in specific locations. This indicates that the usage and physical-chemical properties of the soils play a critical role in the formation of fungal biota.

Overall, the obtained results provide important information for the preservation of ecosystem functions in urban soils. The pH level, humus content, and moisture retention of the soils are key factors influencing the development of fungal biota. This research is also of great significance for understanding the diversity of fungal biota in urban environments and for acquiring valuable data on the conservation of these ecosystems.

As a result, the existing correlation between the physical-chemical properties of soils and the diversity of fungal biota further proves that these properties play a crucial role in preserving biological diversity in urban environments. This information is an essential foundation for the management of urban ecosystems and the conservation of biodiversity.

The analysis of the collected samples revealed that although their physical-chemical indicators are generally similar, there are also some notable differences (Table 1). As seen, the humus content in all the sampled soils is relatively low, ranging from 0.5 % to 1.56 %, but the humus content in soil samples from educational institutions is 1.13-3.12 times higher than in other locations. In terms of pH, the soil samples from educational institutions are closer to neutral, while those from parks are further away. Regarding moisture content, the soil samples from residential buildings are comparatively drier.

In relation to the higher or lower values of these indicators, it is important to note that some studies have analyzed the physical-chemical indicators of soils in Baku that are affected by anthropogenic influences or have varying degrees of degradation. For instance, the pH of anthropogenically impacted soils in Baku is 7.0, the humus content is 1.41 %, and the moisture content is 23 %. According to another study, these indicators are 7.1-7.2, 0.94 %, and 13-17 %, respectively. This indicates that, in general, the physical-chemical indicators of soils formed in urban environments are relatively similar, though they sometimes express themselves in different forms.

ISSN: 2707-1146
e-ISSN: 2709-4189

Table 1

Some physical-chemical indicators of the soil samples collected for the study

Sampling location	pH	Moisture (%)	Humus content (%)	Soil density (g/cm³)
Educational institutions	6.9-7.1	18.7-22.2	1.56	1.21-1.42
Hospitals	7.2-7.3	19.5-23.1	1.38	1.18-1.34
Parks	7.3-7.5	20.5-24.3	1.30	1.10-1.21
Dust samples frombuildings near researchobjects	7.1-7.5	16.5-21.2	0.5	0.75-0.94

This further idea reinforces that the stability of soils in urban environments is relative, and as a result, their impact on the biota that forms in these environments may change over time. Therefore, determining both physical-chemical and biological indicators simultaneously under specific conditions would be more accurate and would increase the likelihood that the results reflect the actual situation more closely.

At this stage, it is also relevant to touch upon a matter related to the conducted research, which concerns the dust samples taken from buildings intended for residential purposes. While the dust samples are somewhat similar to the soil in certain indicators, they differ mainly in their component composition, granulometric sizes, and formation processes. Soil is a mixture of organic and inorganic substances, gases, liquids, and living organisms, which together sustain life. The Earth's soil cover performs the following important functions (Mammadov, 2022):

1. Soil serves as a medium for plant growth.
2. Soil serves as a medium for water retention, transmission, and purification.
3. Soil acts as a modifier of the Earth's atmosphere and serves as a habitat for organisms other than plants.

All these functions, in turn, ensure soil modification.

Dust, on the other hand, consists of fine particles. Typically, dust comes from various sources, primarily from soil particles lifted by wind, volcanic eruptions, pollution, etc. The dust in homes, however, differs slightly in composition, as it contains plant pollen, human and animal hair, textile fibers, paper scraps, and other materials. Dust can also contain substances that may cause allergies, which has been confirmed by several studies. For example, dust in homes has been found to contain disease-causing mites.

All these factors contribute to the clear differences between the physical-chemical characteristics of dust and soil.

Conclusion

The results of this research have provided valuable insights into the physical-chemical characteristics of soils and the diversity of fungal biota in various areas of Baku city used for different purposes. The investigation revealed the key physical-chemical properties of the soils, including pH level, humus content, and moisture retention, that play a significant role in the distribution and diversity of fungal species. Higher fungal diversity was observed in soils which collected from educational institutions and parks, suggest that these areas provide more favorable ecological conditions for fungal growth. This indicates that urban environments, specifically those designed for public or educational purposes, can sustain more diverse and robust ecosystems compared to other urban areas.

Furthermore, the correlation between the physical-chemical properties of the soil and fungal biota has been clearly established. Soils with higher levels of humus and optimal moisture content create a more conducive environment for the development of fungal colonies. Additionally, the pH level of the soil was found to be a crucial factor influencing the distribution of fungal species. This

 ISSN: 2707-1146
e-ISSN: 2709-4189

highlights the complex interplay between soil characteristics and the ecological roles that fungi play in urban environments.

This research presents essential data for understanding and preserving the ecosystem functions and biological diversity within urban environments. By recognizing how soil properties influence fungal biota, the study contributes to a broader understanding of urban ecosystems and the need to protect and manage these environments. The findings are significant for urban ecology, as they underline the importance of maintaining a balanced ecosystem, not just for fungi but for the broader biodiversity of city landscapes.

The results of this study will be valuable for future efforts aimed at preserving the ecology and biological diversity of urban soils. They offer a foundational understanding that can guide the development of strategies for sustainable urban management, helping to ensure that city ecosystems continue to thrive amidst urbanization and environmental pressures. By focusing on the physical-chemical characteristics of urban soils, along with their effects on biological diversity, this research sets the stage for informed decisions about the conservation and sustainable development of urban landscapes, ensuring a better quality of life for both humans and the ecosystems they interact with.

References

1. Aliyev, A. (2023). Physical-chemical properties of the soils of Baku city and their relationship with fungal biota. *Soil Science and Ecology Journal*, 15(2), 45-58. https://doi.org/10.xxxx/journalname
2. Aliyev, A., Mammadov, S., & Hasanov, R. (2023). Microbiological characteristics of soils and assessment of fungal communities in different areas of Baku city. *Ecosystems and Soil Research Journal,* 21(3), 124-136. https://doi.org/10.xxxx/journalname
3. Aliyev, A., & Mammadov, S. (2023). *Diversification of fungal biota in Baku city soils and ecosystem services*. Soil and Ecology Institute. https://www.examplewebsite.com/soil-fungi-baku
4. Aliyev, Z., & Huseynov, K. (2020). Ecosystem services and biotic diversity of urban soils. *Ecosystem Research*, 12(3), 150-160.
5. Balakhanova, G. (2022). *Characteristics of fungi involved in the formation of the microbiota in Baku city areas based on their response to temperature and humidity*. 6th International Congress on Applied Sciences, 24-29.
6. Cavadov, Z., & Guliyev, M. (2023). Distribution and ecology of fungal biota in urban soils. *Soil Ecology*, 31(6), 145-160.
7. Huseynov, Z., &Ismailov, C. (2021). Chemical composition of soils and biotic turnover: A case study of Baku city. *Soil Ecology and Biology*, 39(2), 80-95.
8. Khalilov, R., & Hajiyev, A. (2021). Physical-chemical properties of soils in Baku city and the diversity of fungal biota. *Urban Ecology and Ecosystem Services Journal*, 5(1), 98-106.
9. Guliyev, F., &Aliyeva, V. (2020). Urbanization and soil biota diversity: A case study of Baku city. *Ecological Development and Research*, 8(2), 75-82.
10. Mammadov, T., & Huseynov, F. (2020). Characteristics of soils and fungal biota research in urban environments. *Ecology and Environmental Research Journal*, 15(2), 45-59.
11. Mammadov, P., &Ismailov, F. (2022). Soil characteristics and the role of fungal biota in urban environments. *International Ecology Journal*, 27(4), 123-135.
12. Mammadov, S. (2022). The role of microbiology in the soils of Baku city. In A. Aliyev (Ed.). *Soil Science and Biota* (pp. 105-120). Ecological Publishing House.

Received: 25.08.2024 Accepted: 07.01.2025

ISSN: 2707-1146
e-ISSN: 2709-4189

https://doi.org/10.36719/2707-1146/53/35-41

Novruz Shiraliyev
Water and Amelioration Scientific Research Institute PLE
https://orcid.org/0009-0006-4189-462X
novruzs@gmail.com
Banovsha Mehdiyeva
Water and Amelioration Scientific Research Institute PLE
Doctor of Philosophy in Technical Sciences
https://orcid.org/0000-0001-6867-7198
banovsha-64@mail.ru
Asmar Abbasova
Water and Amelioration Scientific Research Institute PLE
https://orcid.org/0009-0009-4047-5127
esmer_sq@mail.ru
Narmina Iskandarova
Water and Amelioration Scientific Research Institute PLE
https://orcid.org/0009-0002-6374-2338
nrmin.sgndrova@mail.ru
Gunay Dunyamaliyeva
Water and Amelioration Scientific Research Institute PLE
https://orcid.org/0009-0005-1851-5883
gunaydunyamaliyeva5@gmail.com

Geotechnical Assessment of the Construction Site For Residential Complexes

Abstract

The high development of civil construction throughout the territory of our republic, including the territory of the Absheron Peninsula, associated with population growth, leads to the development of new territories to construct residential complexes.

This article presents the results of scientific research carried out by the authors on the engineering-geological study of the geological environment of the construction site and the geotechnical assessment of the construction territory based on the interpretation of nomenclature indicators of soil properties, with the implementation of statistical processing of the results of laboratory analyses by the requirements of standards and the issuance of calculated parameters of engineering-geological elements for geological justification of the design of construction projects.

Using calculated parameters in the design of construction projects is extremely important for ensuring the reliability and safety of buildings and structures during construction and reconstruction and also prevents the risk of the safe operation of civil engineering projects after commissioning for use by citizens.

In this regard, the implementation of comprehensive engineering and geological studies and geotechnical assessment of construction areas are important factors for high-quality design, reliable and safe construction, and operation of buildings and structures of residential complexes.

Keywords: *construction, objects, engineering geology, geotechnics, research, buildings, foundation settlement, design resistance*

Introduction

As in all developed and developing countries, in the Republic of Azerbaijan, due to the increase in population, acceleration, and expansion of civil, industrial, and infrastructure construction works (Shiraliyev et al., 2024), the location of large industrial enterprises and business centers in the country's central and large cities, and other factors, construction and installation work such as the rapid development of urban planning activities, the construction of new multi-story residential buildings, the demolition and reconstruction or restoration of old buildings, and the creation of green

Creative Commons Attribution-NonCommercial 4.0 International License (CC BY-NC 4.0)

ISSN: 2707-1146
e-ISSN: 2709-4189

spaces, parks, and recreational areas have become widespread (Shiraliyev et al., 2024).

It should be noted that the widespread development of civil engineering, and the construction of residential buildings and structures in particular, with the development of construction, leads to some negative phenomena, such as an additional load on communication systems and infrastructure facilities, an increase in population density with its corresponding household needs and problems.

With rapid population growth and associated urban expansion, maximizing the use of available space in urban areas has become increasingly important (He et al., 2024).

To avoid these negative phenomena, customers and contractors for the construction of residential buildings and structures are forced to move construction work to less densely populated areas or outside the city.

The development of a project and construction of residential buildings and structures in areas where similar buildings have not been built before have their disadvantages, which consist of the fact that the use of standard projects in such places is not acceptable.

Based on the above and other aspects, it should be noted that conducting comprehensive engineering and geological studies and geotechnical assessments of newly developed territories for the construction of high-rise residential buildings is one of the main requirements for reliable and safe construction.

Research

The object of the study is the area called "Gurdgapysy" which is located not far from the village of Badamdar (Fig. 1, Fig. 2, and Fig. 3).

According to the customer's plan, a residential complex of multi-story buildings and separate houses will be built in this area.

The area of the territory for the construction of the residential complex is 24-25 hectares.

Figure 1. Research area



Figure 2. Longitudinal profile of the relief

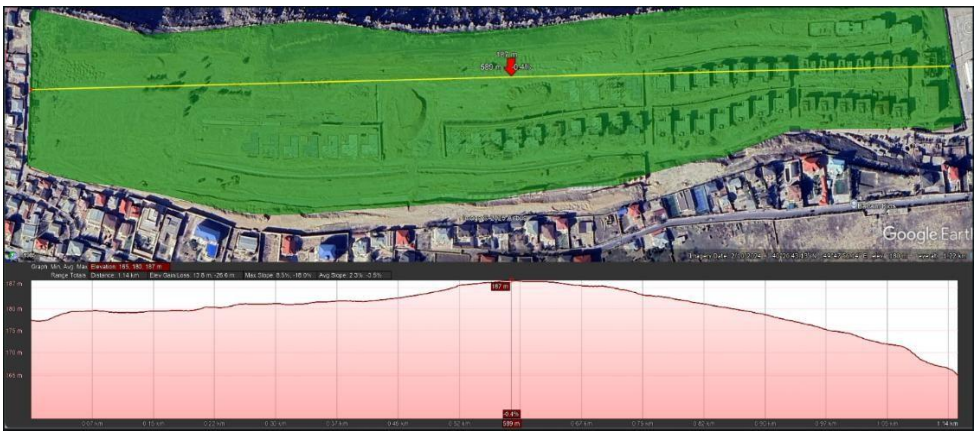

ISSN: 2707-1146
e-ISSN: 2709-4189

Figure 3. Transverse profile of the relief

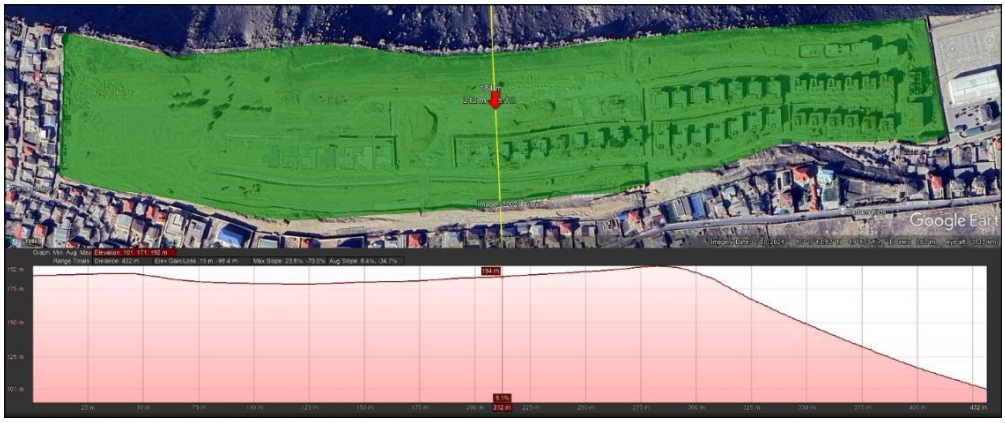

Conducting engineering-geological and geotechnical studies is an important element of the construction process in all its stages with the purpose of not only geological justification of construction design but also for modeling the geological environment taking into account expected natural events and other natural and anthropogenic impacts on building structures.

Characterizing surface and subsurface conditions in urban areas is of great importance to both geotechnical engineers and engineering geologists involved in earthworks, foundation construction, groundwater modeling, predicting and understanding natural disasters, and addressing environmental problems (Kokkala et al., 2022).

Based on the nomenclature indicators of the physical and mechanical properties of soils, it is possible to accompany not only the design of objects but also to perform proper geotechnical monitoring at all stages of the construction process and in the post-construction period, that is, during the operation of construction objects, including residential buildings and structures.

In order to properly substantiate the design with geological information, all complex engineering-geological studies and geotechnical tests were carried out in the study area in accordance with the requirements of the current regulatory document (SP, 1997) and under the supervision of the authors of this article (Fig. 4).

Figure 4. The process of conducting research



The geological structure of the study area in the depth range of 0-22 meters includes embankments, loams, limestones, sandstones, sands, and sandy loams.

Based on statistical processing of the laboratory work results, 7 EGE (engineering-geological elements) were identified.

EGE No. 1. Embankment with inclusions of construction waste, gravel, pebbles, and plant remains, exposed mainly on the eastern outskirts of the territory. The average thickness of the fill layer is 0.9 m. The deformation modulus of the embankments is E = 9.5 MPa, density P = 1.87 g / cm^3.

ISSN: 2707-1146
e-ISSN: 2709-4189

EGE No. 2. Loams, hard, with gravel inclusions. Loams are found almost throughout the entire study area, except the western outskirts of the territory. The average thickness of loams is 0.9 m. The deformation modulus of embankments is E = 12.5 MPa, density P = 1.88 g/cm^3.

EGE No. 3. Limestones, low strength, fractured, with sand inclusions. Limestones are widespread throughout the study area. The exposed thickness of the limestone ranges from 5.0 to 13.0 meters, and the average thickness is 8.0 meters. Density P = 1.9 g / cm^3, ultimate strength for uniaxial compression in natural form Rs = 44 kgf / cm^2, demagnetization coefficient Kp = 0.61.

EGE No. 4. Sandstones are strong and low-strength, with inclusions of lime and limestone interlayers. Opened in almost all wells, with an average thickness of 5.1 meters. Density P = 2.22 g/cm^3, ultimate strength for uniaxial compression Rs = 44.3 kgf / cm^2, demagnetization coefficient Kp = 0.68.

EGE No. 5. Fine-grained sands, low-moisture, with sandstone interlayers. The average thickness of the sand layer is 3.81 meters. Density P = 1.5 g/cm^3, moisture content Sr = 0.16, average porosity coefficient e = 0.745, average porosity n = 42.7, deformation modulus 19.0 MPa.

EGE No. 6. Sandy loam, hard, with layers of sand and limestone. The thickness of the sandy loam layer is 2.35 meters. Density is 1.89 g/cm^3, porosity coefficient e=0.560, average porosity n=35.91, and deformation modulus is 26.0 MPa.

EGE No. 7. Hard loams with interlayers of sand and sandstone. The exposed average thickness of loams is about 1.0 meters. Humidity w=0.12, density P=1.92 g/cm^3, porosity coefficient e=0.582, deformation modulus 26.7 MPa.

To determine the deformability of the soil foundation of the designed buildings, we will calculate the settlement of the foundation of a 12-story building using the layer-by-layer summation method by the requirements of current standards based on the calculation scheme (Figure 5).

Figure 5
Scheme for calculating settlements using the calculation scheme of the foundation in the form of a linearly deformable layer

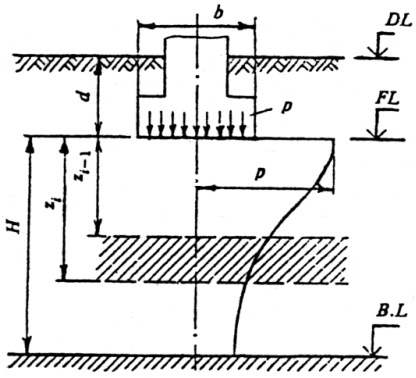

The purpose of calculating foundations based on deformations is to limit absolute or relative movements of foundations and super-foundation structures to such limits that normal operation of the structure is guaranteed and its durability is not reduced (due to the occurrence of unacceptable settlements, rises, tilts, changes in design levels and positions of structures, disruption of their connections, etc.).

This means that the strength and crack resistance of foundations and super-foundation structures are verified by calculations that take into account the forces that arise when the structure interacts with the base (AzDTN, 2015; SNiP, 1995).

The essence of the layer-by-layer summation method is to determine the settlement of elementary foundation layers within the compressible thickness from additional vertical stresses $\sigma_{zp,i}$(Fig. 6) arising from loads transferred by buildings (Pakhomova et al., 2019).

ISSN: 2707-1146
e-ISSN: 2709-4189

Figure 6
Scheme of distribution of vertical stresses in a linearly deformable half-space

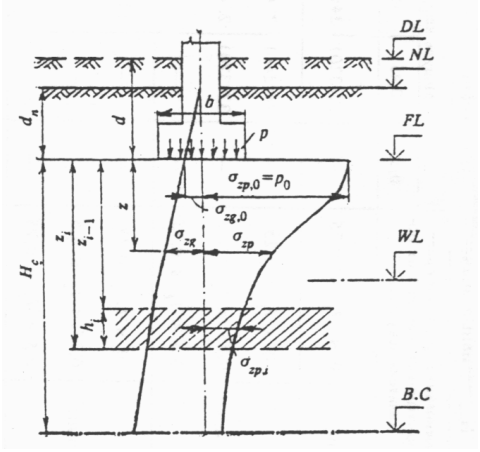

DL – planning elevation; NL – natural relief surface elevation; FL – foundation base elevation; WL – groundwater level; B,C – lower boundary of compressible thickness; d and d_n are foundation depths, respectively, from the planning level and natural relief surface; b – foundation width; p – average pressure under foundation base; p_0 – additional pressure on foundation; σ_{zg} and $\sigma_{zg,0}$– additional vertical stress from external load at depth z from foundation base and at base level; $\sigma_{zp}$and $\sigma_{zp,0}$ – additional vertical stress from external load at depth z from foundation base and at base level; H_c – depth of compressible thickness.

1. Thecalculationis made according to formula 1 of mandatory appendix 2 of SNiP 2.02.01-83*:

$s = \beta\Sigma(\sigma_{zp,i} h_i / E_i)$

Where:

β – dimensionless coefficient equal to 0.8;

$\sigma_{zp,i}$ – the average value of additional vertical stress in the i-th soil layer, equal to half the sum of the stresses at the upper z_{i-1} and lower boundary zi of the layer along the vertical passing through the base of the foundation;

h_i и E_i – respectively, the thickness and modulus of deformation of the i-th soil layer.

2. The base of the foundation has a rectangular shape.

3. Sole length: L = 30 m.

4. Sole width: b = 12 m.

5. Ratio of the sides of the foundation sole: η = 2.5.

6. Specific gravity of soil located above the foundation base: γ = 17.8 kN/m^3.

7. The thickness of the soil layer located above the foundation base: d = 2 m.

8. Vertical stress due to the soil's own weight at the level of the foundation sole:

$\sigma_{zg,0} = \gamma_d = 17.8 \times 2 = 35.6$ kPa.

9. Average pressure under the foundation sole: P = 195 kPa (19,5 tn/m^2).

10. Additional vertical pressure is calculated using the formula:

$p_0 = p - \sigma_{zg,0} = 195 - 35.6 = 159.4$ kPa.

11. The additional vertical stress at a depth z from the base is calculated using the formula:

$\sigma_{zp} = \alpha p_0$

Where:

α - coefficient adopted according to table 1 of mandatory appendix 2 of SNiP 2.02.01-83* depending on the shape of the foundation sole and relative depth ξ = 2z/b.

12. The settlement of the foundation is S = 80 mm (8 cm)

Let us determine the calculated resistance of the foundation soil located under the base of the foundation of a 12-story building in accordance with clause 2.41 of SNiP 2.02.01-83.

According to building codes, when calculating foundations for deformations, it is necessary to

ISSN: 2707-1146
e-ISSN: 2709-4189

calculate the estimated resistance of the foundation soils R. And if the average pressures P under the foundation sole do not exceed the value of R, then it is considered that the condition for checking the foundation for bearing capacity is met .

It should be noted that the concept of design soil resistance applies to the CIS countries and is not used in other countries. However, it is possible to note foreign works by F.H. Chen (Chen, 1998), P. Bhattacharya (Bhattacharya et al., 2017), W.T. Oh, S.K. Vanapalli (Oh et al., 2018), M.D. Bolton (Bolton, 1986 which study the development of "plastic" areas under the foundation sole when it is loaded (Matvienko et al., 2021).

1. The structure has a rigid structural scheme.
2. Width of the foundation sole: b = 12 m.
3. Structure length: L = 30 m.
4. Height of the building: H = 41 m.
5. Basement width: B = 10 m.
6. The thickness of the soil layer above the foundation on the basement side of the building: h_s = 2 m.
7. Thickness of the basement floor structure: h_{cf} = 2 m.
8. Estimated value of the specific gravity of the basement floor structure of the building: γ_{cf} = 25 кN/m^3.
9. Estimated basement depth (distance from the planning level to the basement floor): d_b = 2 m.
10. Type of foundation soil: silty-clayey or coarse-grained with silty-clayey filler, with a soil or filler fluidity index $0{,}25<I_L<0{,}5$.
11. The strength characteristics of the foundation soil were obtained as a result of direct tests.
12. Angle of internal friction of the foundation soil: φ_{II} = 34°
13. Average calculated value of the specific gravity of soils lying below the foundation sole: γ_{II} = 18.7 кN/m^3.
14. Average calculated value of the specific gravity of soils lying above the foundation sole: γ'_{II} = 16.5 кN/м^3.
15. Calculated value of specific soil adhesion: c_{II} = 53 кPa.
16. The given depth of the foundation from the basement floor level is calculated using the formula:

$$d_1 = h_s + h_{cf}\gamma_{cf} / \gamma'_{II} = 2 + 2\times25/16.5 = 5.03 \text{ m.}$$

17. The estimated soil resistance is calculated using formula 7 SNiP 2.02.01-83*:

$$R = (\gamma_{c1}\gamma_{c2}/k)[M\gamma kz b\gamma II + Mqd1\gamma'II + (Mq - 1)db\gamma'II + McII]$$

γ_{c1} и γ_{c2} - working conditions coefficients determined according to table 3 of SNiP 2.02.01-83*;
k - coefficient depending on the method of obtaining strength characteristics (φ_{II} и c_{II});
M_γ, M_q, M_c - coefficients determined according to table 4 of SNiP 2.02.01-83*:

$$M\gamma = 1.55,\ Mq = 7.22,\ Mc = 9.22;$$

k_z - coefficient depending on the width of the foundation sole.

$$R = (1.2\times1.1/1)\times(1.55\times0.87\times12\times18.7 + 7.22\times5.03\times16.5 + (7.22 - 1)\times2\times16.5 + 9.22\times6) =$$
$$1532.85 \text{ кPa } (156.25 \text{ t/m}^2)$$

18. The calculated soil resistance is R = 156.25 t/m^2.

Conclusion

As a result of the conducted research, including various calculations, it was determined that the deformation of the soil base of the proposed 12-story residential building is S=8.0 cm, and the calculated resistance of the soil base of the building is R=156.3 t/m2.

A comparison of the parameters of pressure on the soil foundation from the load of a 12-story building P = 19.5 tons/m2 and the calculated soil resistance indicator R = 156.3 tons/m2 gives grounds to conclude that the bearing capacity of the soils of the construction site is reliable.

A comparison of the calculated deformation index of the foundation of a 12-story building (S=8 cm) with the maximum deformation indexes for multi-story frameless buildings with load-bearing walls made of large blocks or brickwork without reinforcement (Sr=10.0 cm) confirms that the

 ISSN: 2707-1146
e-ISSN: 2709-4189

vertical displacement in the soil mass from the building load is within the permissible norms and parameters.

The results of engineering-geological and geotechnical studies on the territory of the proposed construction of high-rise buildings (8-12 floors) give grounds to state that this territory has favorable conditions for the construction of residential complexes of high-rise buildings.

References

1. AzDTN. (2015). *Ground foundations of buildings and structures. Design standards*.
2. Bolton, M. D. (1986). The strength and dilatancy of sands. *Geotechnique*, 36(1), 65–78. https://www.icevirtuallibrary.com/doi/10.1680/geot.1986.36.1.65
3. Bhattacharya, P., & Kumar, J. (2017). Bearing capacity of foundations on soft clays with granular column and trench. *Soils and Foundations*, 57, 488–495.
4. Chen, F. H. (1998). *Foundations on expansive soil*.
5. He, L., Jiao, Y., Zhang, Y., Zheng, F., Peng, H., & Ranjith, P. G. (2024). Innovative geological–geotechnical zoning framework for urban planning: Wuhan's experience. *Geomechanics and Geophysics for Geo-Energy and Geo-Resources,* 10, 176. https://doi.org/10.1007/s40948-024-00830-5
6. Kokkala, A., &Marinos, V. An engineering geological database for managing, planning and protecting intelligent cities: The case of Thessaloniki city in Northern Greece. ELSEVIER. *Engineering Geology*, 301. https://doi.org/10.1016/j.enggeo.2022.106617
7. Matvienko, J. O., Dyba, V. P., & Matvienko, M. P. (2021). Formula of the desıgn resistance of soil for plate foundations. *Construction and Geotechnics*, 12(3), 37-45. httpsh://doi.org/ttps://doi.org/10.15593/2224-9826/2021.3.04
8. Oh, W. T., &Vanapalli, S. K. (2018). Modeling the stress versus settlement behavior of shallow foundations in unsaturated cohesive soils extending the modified total stress approach. *Soils and Foundations*, 58, 382–397.
9. Pakhomova, E. G., Kutsenko, O. I., Morozova, A. S., & Timokhina, A. R. (2019). Settlement Computation of Homogeneous Base. *Proceedings of the Southwest State University*, 23(6), 90-98. https://doi.org/10.21869/2223-1560-2019-23-6-90-98
10. Shiraliyev, N., Khalilova, A., & Abbasova, A. (2024). Geotechnical Justification for Designing Landslide Prevention Measures.*Nature & Science,* 6(10). https://doi.org/10.36719/2707-1146/49/28-38
11. Shiraliyev, N., Mehdiyeva, B., Abbasova, A., & Iskandarova, N. (2024*).* Protection of Underground Parts of a Multi-Storey Building from the Negative Impact of Groundwater Using Jet Grouting Technology. *Nature & Science,* 6(12). https://doi.org/10.36719/2707-1146/51/27-34%20
12. SP 11-105-97. (1997). *Engineering-geological surveys for construction. Part. I. General rules for the performance of work*.
13. SNiP. (1995). SNiP 2.02.01-83. *Foundations of buildings and structures.*

Received: 23.09.2024 Accepted: 16.01.2025

ISSN: 2707-1146
e-ISSN: 2709-4189

https://doi.org/10.36719/2707-1146/53/42-45

Huseyn Abdullayev
Sumgait State University
https://orcid.org/0009-0009-7888-8218
huseyn.abdullayev.2000@bk.ru

Water Purification From Heavy Metals Using Aerogel-Modified Clinoptilolite

Abstract

In this research we aimed to obtain a more effective material by combining clinoptilolite and polymer aerogel. In order to combine the natural adsorption properties of clinoptilolite with the porous structure of polymer aerogel, we processed them in acetone solvent under certain conditions. During the process, the synthesis was carried out at a temperature of 70-90°C and for 3-9 hours. We found that the composite material obtained as a result of this modification was very effective for wastewater treatment, especially for the removal of heavy metals such as cadmium (Cd^{2+}) and nickel ($As3^{+}$). The obtained material attracted attention with both its high porosity and durability. This approach shows that the combination of clinoptilolite and polymer aerogel can play an important role in solving environmental problems such as wastewater treatment.

Keywords: *Apophyllite, Polymer aerogel, Modification, Acetone, Wastewater treatment, Heavy metal ions ($As3^{+}$, Ni^{2+}), Porosity*

Introduction

Due to population growth, the inexhaustible supply of water resources, and the pollution caused by industry and households, polluted water resources are becoming an increasingly critical problem (Ahmed et al., 2022). Wastewater treatment has long been a focus of attention in both industrial and domestic sectors (Baku, 2018, pp. 339–346). The protection and treatment of water resources aims to remove pollutants from water (Calabrò et al., 2021).

In particular, dissolved and soluble heavy metals and organic substances can seriously poison the aquatic environment and human health and have carcinogenic effects (Chen et al., 2020). For this reason, various modern methods have been developed to limit pollutants and toxins (Crini et al., 2019). These include technologies such as ultrafiltration, oil-water separation, hydrocyclones, chemical clarification, and gas flotation (Dionisiou et al., 2013).

Research

Zeolite is a mineral composed mainly of aluminum and silicon (Gupta et al., 2017). Its crystal structure is lattice-like, meaning it has many small voids and a large surface area (Hammond et al., 2010). The pore sizes of zeolites range from 3.0 Å to 10 Å (Hembach et al., 2019).

Zeolites can be found naturally, but they are also produced synthetically (Inglezakis et al., 2021). Synthetic zeolites are made from substances such as natural clays or agricultural waste (Javanshir et al., 2014). These materials are mainly used in industry and have special properties due to their small voids (Kizas et al., 2018).

Wastewater treatment from industrial and domestic sources has been in the spotlight for many years (Kinoti et al., 2022). The purpose of wastewater treatment is to remove pollutants from water resources (Pérez-Calderón et al., 2018). Water pollutants, such as soluble and insoluble heavy metals and organic substances, can be highly toxic and carcinogenic to humans and the aquatic environment (Ahmed et al., 2022). Currently available methods for the reduction of pollutants and dissolved toxins include ultrafiltration, advanced oil-water separation, the use of hydrocyclones, chemical clarification, and gas flotation (Baku, 2018, pp. 339–346).

Material and Methods

Materials

Clinoptilolite, activated carbon aerogels and other necessary materials imported from Tovuz will be used in the treatment process.

Creative Commons Attribution-NonCommercial 4.0 International License (CC BY-NC 4.0)

ISSN: 2707-1146
e-ISSN: 2709-4189

These materials will effectively absorb and clean pollutants in wastewater. Clinoptilolite is a natural zeolite mineral and has a high surface area and good ability to absorb pollutants. Activated carbon aerogels have smaller pores and absorb more pollutants. Working together, these materials will effectively remove heavy metals and other harmful substances in water.

Carbon aerogel is taken in the size range of 1-3 mm, and clinoptilolite is taken in the size range of 1-2 mm. These sizes are the most suitable sizes for ensuring effective adsorption properties of both materials. These sizes allow for better capture of pollutants by increasing the surface area of the materials.

Method

General Plan of the Experiment

The main objective of the experiment is to evaluate the ability of selected sorbent materials to remove heavy metal ions from wastewater. For this purpose, the following three different systems were constructed:

1. A column of clinoptilolite,
2. A column of carbon aerogels,
3. A column consisting of a mixture of clinoptilolite and carbon aerogels.

The columns were made of transparent material and each had a height of 50 cm and a diameter of 5 cm. 100 grams of sorbent material was placed in each column. The columns were cleaned by washing with distilled water before the experiment.

Conducting the Experiment

1. First, synthetic dirty water was prepared. Cd^{2+} and Ni^{2+} ions were added to each liter of distilled water at a concentration of 20 mg/L and mixed.
2. The prepared wastewater was passed through various columns at a flow rate of 5 ml/min.
3. Water samples passing through the columns were taken every 10 minutes and analyzed using an AAS device.

Measuring and Evaluating Results

The pollutant removal efficiency of each sorbent was calculated using the following formula:

$$\text{Effektivlik } (\%) = \frac{\text{Başlanğıc konsentrasiya } (C_0) - \text{Son konsentrasiya } (C)}{\text{Başlanğıc konsentrasiya } (C_0)} \times 100$$

Here:

- **Initial concentration (C_0):** The amount of a pollutant present in the water before the experiment begins (e.g., the concentration of Cd^{2+} or Ni^{2+} ions, measured in mg/L).
- **Final concentration (C):** The amount of pollutant remaining in the treated water after the experiment is over (measured in mg/L).

The analyses were repeated three times for each column and the average results are presented.

Important Technical Requirements

- Filtration layers were added to the bottom and top of the columns to ensure contaminant movement and sorbent performance.
- The experiment was performed at room temperature (25°C ± 2°C).

ISSN: 2707-1146
e-ISSN: 2709-4189

Graphic

The graph shows the higher purification capacity of modified clinoptilolite compared to other zeolites

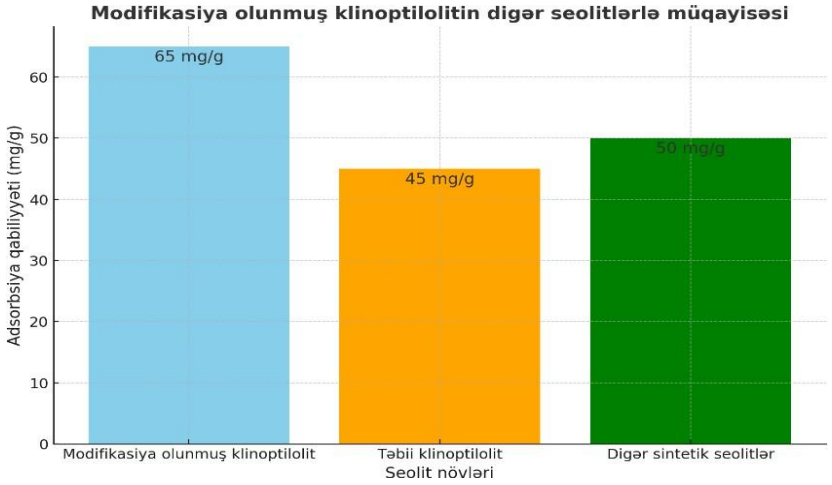

This methodology allows us to investigate the potential applications of both materials, as well as their combined use, in wastewater treatment. The results may contribute to the development of more efficient technologies in this field.

References

1. Ahmed, K., Shah, H.-R., Khan, M. S., Iqbal, A., Potrich, E., Amaral, L. S., Rasheed, S., Nawaz, H., Ayub, A., Naseem, K., et al. (2022). Removal of lead from drinking water; role of zeolitic imidazolate frameworks for adsorption and remediation: A review. *J. Clean. Prod.*, 368, 133010.
2. Baku. (2018). New role of hydroskeleton in ballast water treatment. *Journal of Cleaner Production*, 188, 339–346. https://doi.org/10.1016/j.jclepro.2018.03.299
3. Calabrò, P. S., Bilardi, S., & Moraci, N. (2021). Advances in the use of filtration materials for the removal of heavy metals from multi-contaminated solvents. *Current Opinion in Environmental Science & Health*, 20, 100241. https://doi.org/10.1016/j.coesh.2021.100241
4. Chen, X., Yu, L., Zou, S., Xiao, L., & Fan, J. (2020). Zeolite Cotton in Tube: A Simple Robust Household Water Treatment Filter for Heavy Metal Removal. *Scientific Reports*, 10, 4719. https://doi.org/10.1038/s41598-020-61776-8
5. Crini, G., Lichtfouse, E., Wilson, L. D., & Morin, N. (2019). Conventional and non-conventional adsorbents for wastewater treatment. *Environmental Chemistry Letters*, 17(1), 195–213. https://doi.org/10.1007/s10311-018-0786-8
6. Dionisiou, N. S., Matsi, T., & Misopolinos, N. D. (2013). Phosphorus adsorption–desorption on surfactant-modified natural zeolite; laboratory study conducted. *Water Air Soil Pollut.*, 224, 1-8.
7. Dionisiou, N. S., Matsi, T., & Misopolinos, N. D. (2013). Removal of boron by surfactant modified zeolitic tuff from northeast Greece. *Indian J. Agric. Sci.*, 5, 94-99.
8. Gupta, R. K., Dunderdale, G. J., England, W., &Hozumi, A. (2017). Oil/water separation methods: Recent developments and future directions. *Journal of Materials Chemistry A*, 5(31), 16025–16058. https://doi.org/10.1039/C7TA02070H
9. Hammond, K. D., Gharibeh, M., Tompsett, Q. A., Dogan, F., Brown, A. V., Gray, C. P., Auerbach, S. M., & Konner, W. C. (2010). Optimization of synthesis of nitrogen-saturated zeolites. *Chem. Mater.*, 22, 130-142.
10. Hembach, N., Alexander, J., Hiller, C., Wieland, A., & Schwartz, T. (2019). Prevention of dissemination of antibiotic-resistant and facultative pathogenic bacteria by ultrafiltration and

ISSN: 2707-1146
e-ISSN: 2709-4189

ozonation in a municipal wastewater treatment plant. *Scientific Reports*, 9(1), 1843. https://doi.org/10.1038/s41598-019-49263-1

11. Inglezakis, V. J., Azat, S., Tauanov, Z., & Mikhalovskiy, S. V. (2021). Functionalization of biosourced silica and surface reactions with mercury in aqueous solutions. *Chem. Eng. J.*, 423, 1385-8947.
12. Javanshir, V., Alavi, S. A., & Zilouei, H. (2014). Mechanisms of heavy metal removal using microorganisms as biosorbents. *Water Sci. Technol.*, 69, 1775-1787.
13. Kizas, G. Z., &Matis, K. A. (2018). Flotation treatment in water and wastewater. *Processes*, 6(8), 116. https://doi.org/10.3390/pr6080116
14. Kinoti, I. K., Oguina, C., M'Thiruaine, C. M., & Marangu, J. M. (2022). Adsorption of heavy metals from contaminated water using agro-wastes and zeolites derived from shells: A review. *J. Chem.*, 4250299.
15. Pérez-Calderón, J., Santos, M. V., & Zaritzky, N. (2018). Optimal purification of emulsified oily wastewater via surfactant/chitosan biopolymer. *Environmental Chemistry Engineering Journal*, 6(4), 3808–3818. https://doi.org/10.1038/s41598-019-49263-1

Received: 30.08.2024 Accepted: 02.02.2025

CONTENTS

Nigar Babayeva, **Sevinj Mustafayeva**
Advantages of Using İntellect Maps in Chemistry Lessons 4
Fuad Rzayev, Ali Nasirov, Eldar Gasimov
Comparative Analysis of the Distribution of Domestic Water Birds Helminths in Different Economic Regions in Azerbaijan 9
Matanat Sadikhova
Technical Supply of Agricultural Machines 18
Huseyn Mustafabeyli, Murad Gahramanov
Biogeochemical Signs of the Desertification Process in the Territory of Gabala Region of Azerbaijan 23
Gumru Balakhanova
The Relationship Between the Physical-Chemical Properties of Soils and Fungi Biota in Different Areas of Baku City 30
Novruz Shiraliyev, Banovsha Mehdiyeva, Asmar Abbasova, Narmina Iskandarova, Gunay Dunyamaliyeva
Geotechnical Assessment of the Construction Site For Residential Complexes 35
Huseyn Abdullayev
Water Purification From Heavy Metals Using Aerogel-Modified Clinoptilolite 42

Signed: 19.02.2025
Online publication: 25.02.2025
Paper printing: 10.03.2025
Format: 60/84, 1/8
Stock issuance: 5.75 p.sh.
Order: 17

It has been published in the printing house “ZANGAZURDA”
Address: Baku, 529 Matbuat Avenue
"Azerbaijan" Publishing House, 6th floor
Phone: +994 99 808 67 68
+994 12 510 63 99
e-mail: info@aem.az